Australia $1.35 Malaysia $4.95 IR £1.26 (inc. VAT)

PRACTICAL ELECTRONICS

DECEMBER 1982

85p

PE Micrograsp

Stylochord

Also... MICRO-FILE Pull-out
MICROPROCESSOR DATA

ELECTRONIC HOBBIES FAIR
50p Coupon Inside

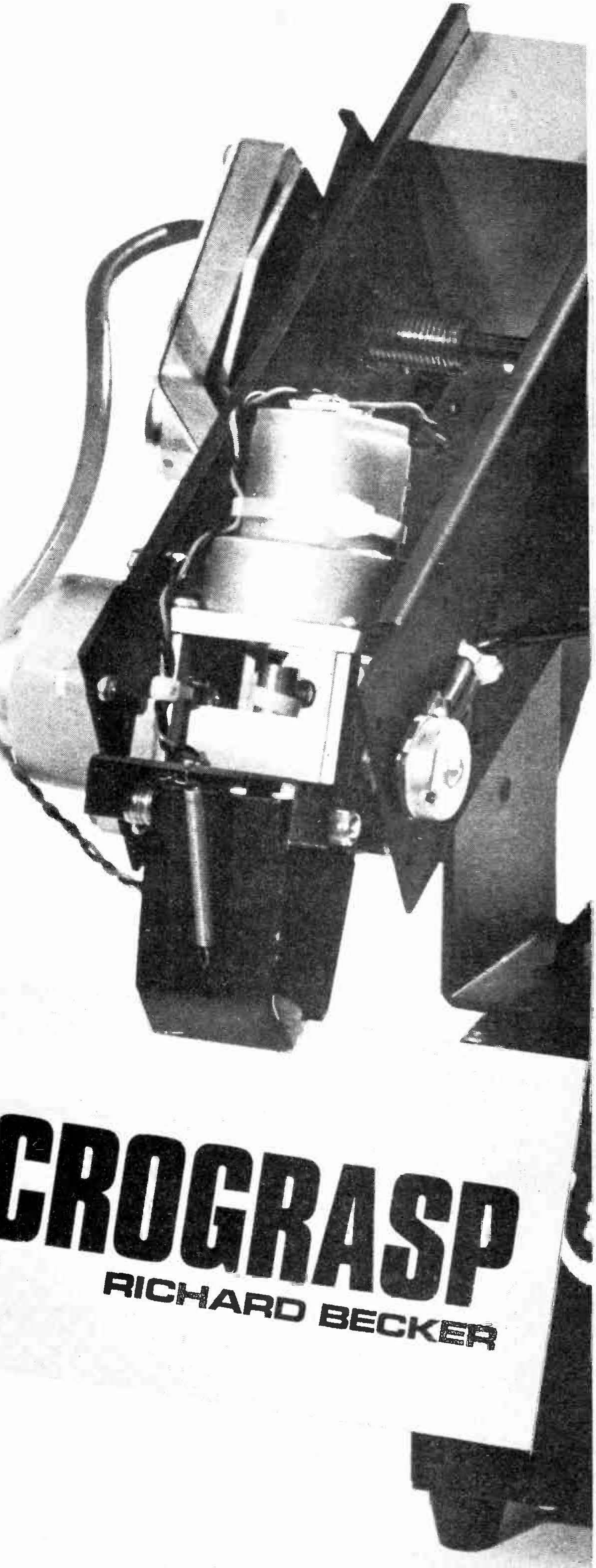

PE MICROGRASP

PART 1

RICHARD BECKER

The Genesis range of robots published in these pages last winter have most effectively filled their role of providing a low cost introduction to robotics. Although their price is well within the budgets of further education establishments, industrial production and research and development departments; state run schools and home constructors have found it more of a struggle to raise the funds. In order to provide them with hands-on-experience of robotics we have created the ultra low cost Micrograsp.

At the same time further development of the Genesis P101 has resulted in P102, a higher performance version.

MICROGRASP was designed to be priced at under £200 inclusive of power supply, computer interface board and even VAT! However, despite that restriction, it has some very powerful features. Driven by a simple computer, the ZX81 being eminently suitable, Micrograsp has an articulated arm jointed at shoulder, elbow and wrist positions. The entire arm rotates about the base and there is a motor-driven gripper. Each of the arm movements is servo controlled i.e. there are position sensors feeding back information to the interface board, where it is compared with the programmed-in intended position, and automatically taking corrective action. This servo action is independent of the computer, greatly simplifying the software to drive the robot and all programming is carried out with a small number of Basic commands.

MECHANICAL OPERATION

For each of the five axes there is a motor with integral gearbox. For the wrist and gripper motors small in-line gearboxes are used. The other axes use more powerful gearboxes in heavy duty zinc alloy castings. The shoulder and elbow joints are driven directly from the motors gearboxes with both motors mounted on the lower arm (Fig. 1). On the upper arm and the shoulder support bracket are steel bushes clamping the gearbox shaft so that when the motors are driven there is relative movement between the lower arm and the upper arm and the support bracket.

Also on the lower arm are the position sensing potentiometers. On the bushes of these are plastic bushes on which the arm rotates. The shaft of each potentiometer is held in the steel bush fitted to the upper arm or support bracket.

For rotating the arm (axis O) it is not possible to have the gear box shaft, the potentiometer and the shoulder support bracket all in line so the power is taken from the gearbox (Fig. 2) by a pair of spur gears which being of 2:1 ratio result in a doubling of torque. For this axis the gearbox shaft is taken out from the motor side of the gearbox.

For raising and lowering the wrist (axis 3) the gearbox shaft rotates a bar to which the potentiometer shaft and gripper mounting plate are fitted (Fig. 3). Through this bar the drive shaft for the gripper lead screw passes. When the

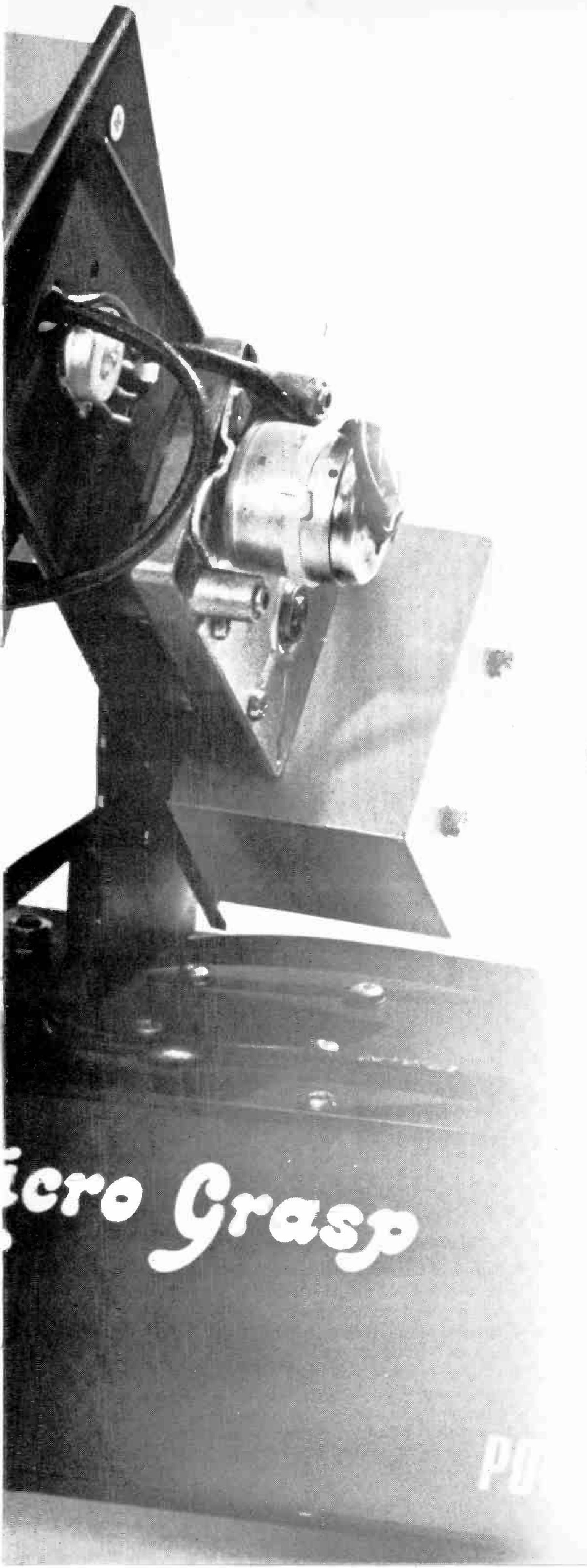

screw turns clockwise the disc nut is moved in pulling the jaws together (Fig. 4). On turning anticlockwise the disc nut moves out and the springs pull the jaws apart.

The arms for the robot each have counterbalance weights so that no voltage needs to be applied to the motors to hold the arm in the desired position. This improves the accuracy of the servoing. Without balancing an error signal would

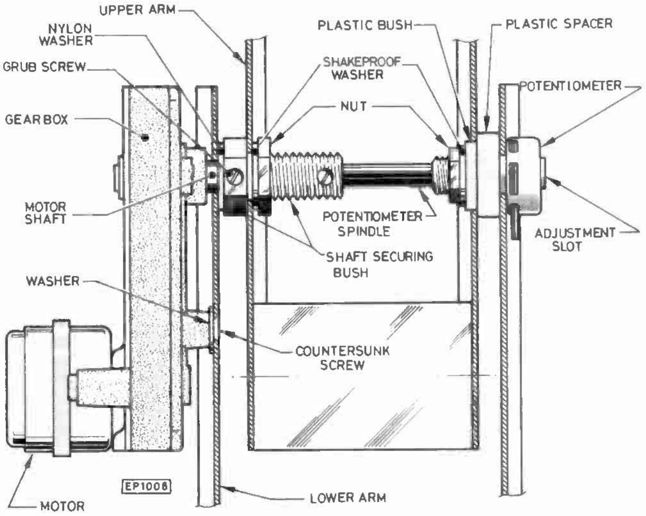

Fig. 1 Linkage between the motor, arms and potentiometer for axis 2 movement. Axis 1 operation is similar

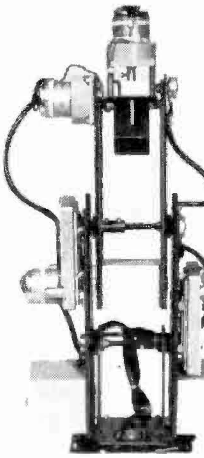

(Left) Showing central position of the above linkage assembly

(Below) Interior of robot base showing Fig. 2 linkage and power supply

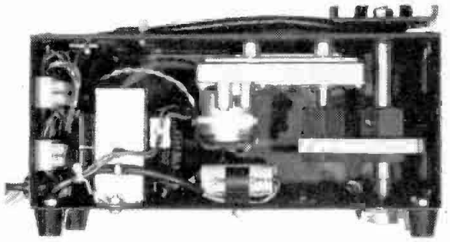

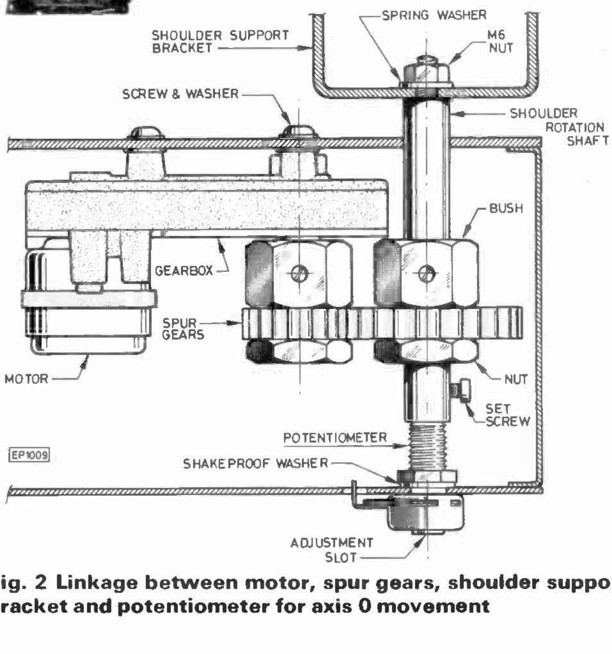

Fig. 2 Linkage between motor, spur gears, shoulder support bracket and potentiometer for axis 0 movement

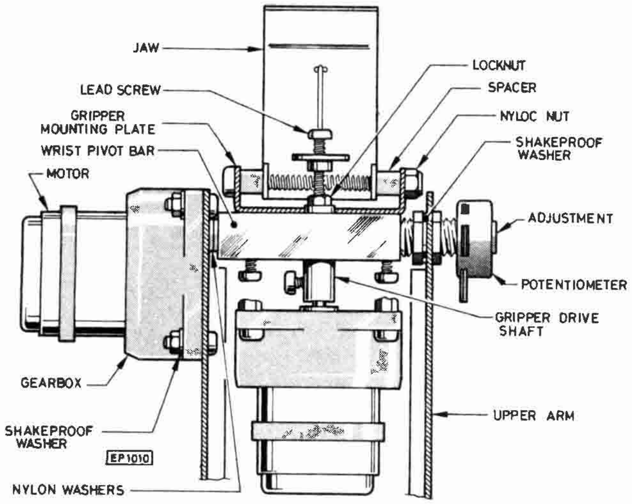

Fig. 3 Linkage between motor, gripper mounting bar and potentiometer for axis 3 movement

always be required for the arm to be motionless and a considerable torque would also have to be provided by the gearboxes causing an undue strain upon them.

CIRCUIT OPERATION

The interface board is designed to operate as a memory mapped peripheral of the controlling computer which generates the positional and manipulative commands whilst servoing is taken care of by linear circuitry on the interface board greatly simplifying the work of the computer and avoiding the requirement for extensive software specific to each type of machine. Some computers have I/O ports by which data could be sent to the robot, however the commonest and cheapest computer on the market, the ZX81 does not have this facility. It does however have an expansion bus giving access to all the address, data and control lines. Virtually all other micro computers also have this facility making practical a universal interface. The signals required are the address bus, data bus, $\overline{\text{WRite}}$ and $\overline{\text{Mem REQuest}}$. The connector format choice could have been arbitrary but in view of the particular cost effective suitability of the ZX81 the layout of that machine was selected and by using two back-to-back 23 way double sided connectors, a very neat connection with no wires can be made.

For any other computer a 23 way connector would be wired to one of the type recommended by that computers manufacturer. Using back-to-back connectors does however prevent the use of the 16K RAM pack limiting program length to about 30-60 lines. This restriction is avoided by use of the three way adaptor p.c.b. (Fig. 5) whereby the RAM pack lies neatly on top of the computer.

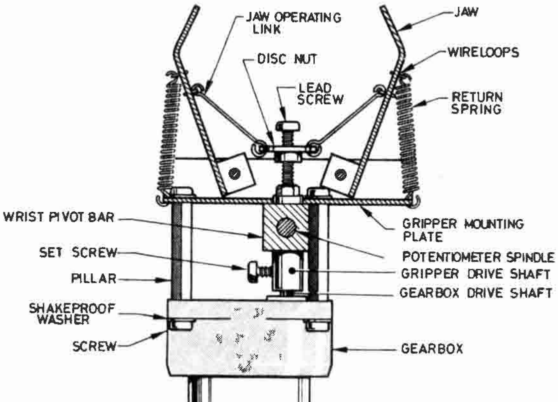

Fig. 4 Operating mechanism for the gripper

By setting the ten bank DIL switch (Fig. 6) any one of 1024 blocks of 64 bytes of the memory area can be selected. Actually only six bytes are required but to narrow down the memory area used would call for extra circuitry and with memory costs per byte of around 0.15p or less such extra complexity is pointless. IC2 is a ten bit comparator. The ten most significant address lines are compared with the +5V or 0V levels set up by the switch and when there is a match, i.e. when the computer selects an address within the 64 byte block, pin 13 goes high. The three least significant address lines are connected to IC3, a three into eight decoder, to select which axis is to be given a fresh command.

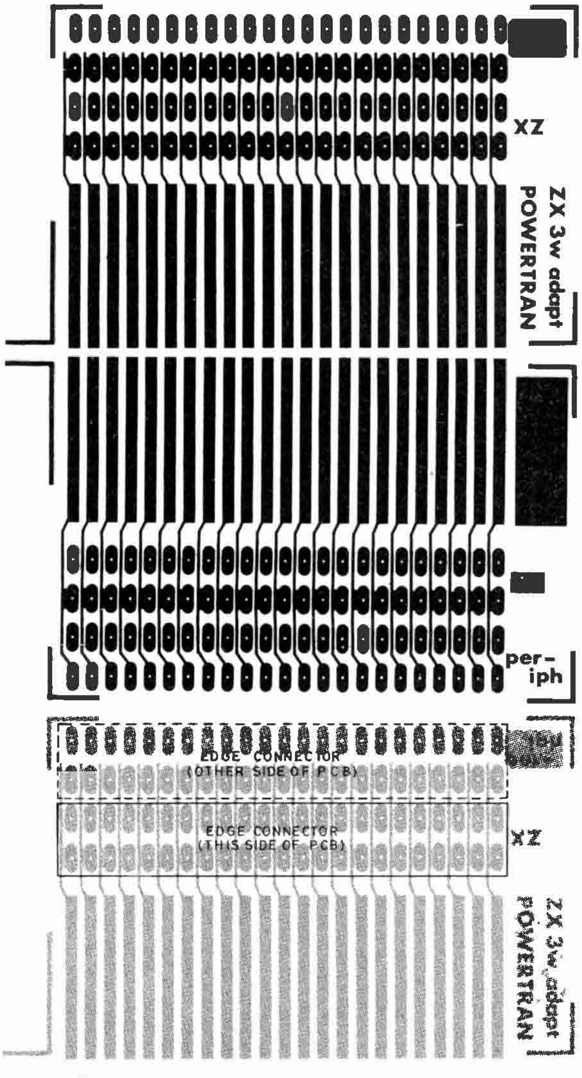

Fig. 5 Printed circuit of three way adaptor

The output of the decoder is enabled only when $\overline{\text{WR}}$ and $\overline{\text{MREQ}}$ are low and IC2 pin 13 is high i.e. when the computer is addressing the chosen axis as if it were a memory location into which data is to be written. For example if the top of the address space is to be used all the switches would be set to be open therefore addresses 65472–65535 are allocated to the robot. To move the rotation axis (servo circuit A) to the centre position the command would be POKE 65472, 128. 128 being the centre of the range of positions defined as 0

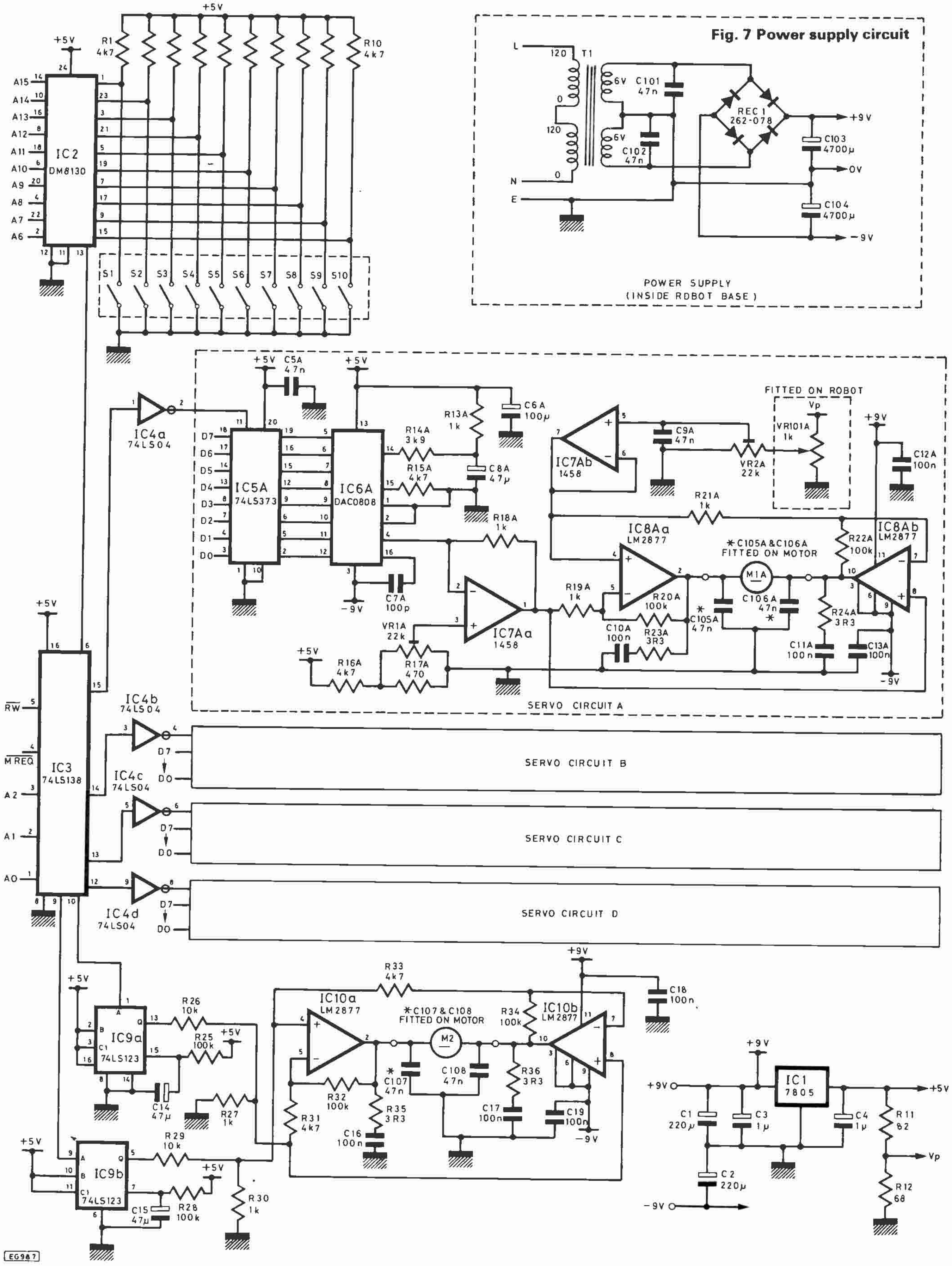

Fig. 6 Circuit of computer interface

COMPONENTS

INTERFACE BOARD

Resistors

R1, R2, R15A–D, R16A–D, R31, R33	4k7 (12 off)
R3–10	4k7 SIL network
R11	82R
R12	68R
R13A–D, R18A–D, R19A–D, R21A–D, R27, R30	1k (18 off)
R14A–D	3k9 (4 off)
R17A–D	470R (4 off)
R20A–D, R22A–D, R25, R28, R32, R34	100k (12 off)
R23A–D, R24A–D, R35, R36	3R3 (10 off)
R26, R29	10k (2 off)

Potentiometers

VR1A–D, VR2A–D	22k preset (8 off)

Capacitors

C1, 2	220µ/16V vertical electrolytic (2 off)
C3, 4	1µ/16V tantalum (2 off)
C5A–D	47n ceramic (4 off)
C6A–D	100µ/10V vertical electrolytic (4 off)
C7A–D	100p ceramic (4 off)
C8A–D	47µ/10V vertical electrolytic (4 off)
C9A–D	47n polyester (4 off)
C10A–D, C11A–D, C12A–D, C13A–D, C16–19	100n polyester (20 off)
C14, C15	47µ/6V3 tantalum (2 off)

Integrated Circuits

IC1	7805
IC2	DM8130
IC3	74LS138
IC4	74LS04
IC5A–D	74LS373 (4 off)
IC6A–D	DAC0808 (4 off)
IC7A–D	1458 (4 off)
IC8A–D, IC10	LM2877 (5 off)
IC9	74LS123

Miscellaneous

- Printed circuit board
- S1–S10–SPST 10 bank DIL switch
- TV5 heatsink
- 8 pin i.c. socket (4 off)
- 14 pin i.c. socket
- 16 pin i.c. socket (6 off)
- 20 pin i.c. socket (4 off)
- 24 pin i.c. socket

ROBOT

Capacitors

C101, C102, C105A–D, C106A–D, C107, C108	47n ceramic (12 off)
C103, C104	4700µ/16V horizontal electrolytic (2 off)

Diodes

REC1	6A rectifier block

Transformer

T1	0–120V, 0–120V primary 6–0–6V at 4A secondary

Potentiometers

VR101A–D	1k linear

Miscellaneous

Motors, mechanical parts, fixings etc.
A kit of parts is available from—
Powertran Cybernetics,
Portway Industrial Estate,
Andover,
Hants, SP10 3NN £125–Robot plus 15% VAT
£48·50–Interface plus 15% VAT.

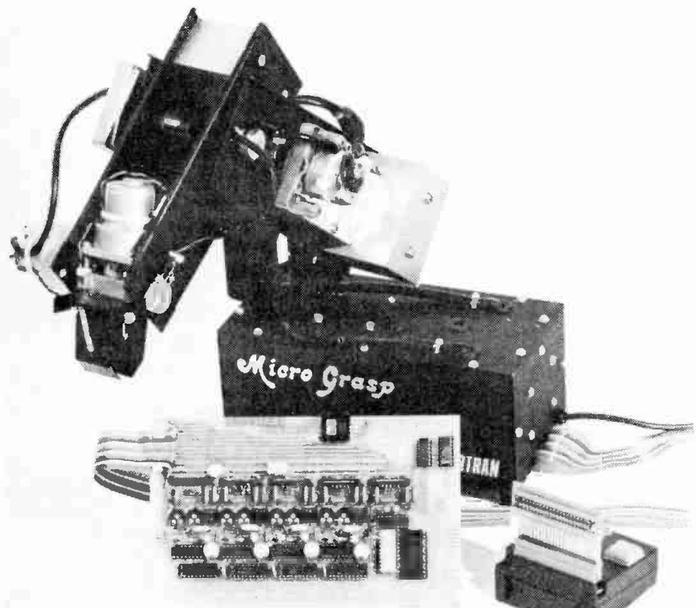

Micrograsp with computer interface board, RAM pack and adaptor

to 255. Because of the redundancy in address selection 65480, 65488, 65496, 65504, 65512, 65520 and 65528 would be equally effective addresses.

The decoder enables IC4 which is an eight bit wide data latch which holds the data indefinitely after the writing-in process is completed. The data is converted into a d.c. level in the range 0V to 1V by IC6 which is a digital-to-analog converter and IC7a converts the current output of the DAC into a voltage, the feedback resistor R18 giving it a gain of 1 volt/ma. IC7a is also used to add in an offset voltage to balance out the residual voltage from VR101 when the axis is at its zero code position i.e. lowest or furthest left position. The position of the axis is sensed by VR101 to which is applied about 2V derived from the 5V rail via R11, R12. 1V corresponds to the position in the centre of the travel of that axis. VR2 is used in setting the range of movement and IC7b is a unity gain buffer enabling the low (1k) input impedance of the power amplifier stage to be driven without loading VR101 significantly.

IC8 performs two functions simultaneously. It compares the measured position of the axis with the programmed-in desired position and serves as a bridge output power amplifier to drive the motor either backwards or forwards with a voltage dependent on how far away from the desired position the axis has reached. To see how the circuit operates, first we consider the half with pins 7, 8, 10. The desired position voltage (DPV) is applied to pin 8, feedback via R22 makes pin 7 a virtual earth point elevated above ground by the voltage on pin 8. The measured position voltage (MPV) forces a current into this point via R21 resulting a voltage at pin 10 which is R22(DPV–MPV)/R21 i.e. pin 10 will go positive when MPV is less than DPV.

The other half of the i.c. behaves similarly except that pin 2 will go negative when MPV is less than DPV. As the circuit is symmetrical the voltage applied to the motor is therefore twice R22(DPV–MPV)/R21. The components selected resulting in a servo action which is close to critically damped.

R23 + C10 and R24 + C11 are the Zobel networks used almost universally to stop power amplifiers becoming power oscillators in the MHz region.

Capacitors C12, C13 are for local decoupling to also assist in ensuring stability and C105, C106 are suppression capacitors fitted as close as possible to the motor. Without these the interference from the motor brushes is sufficient to make the computer abort its program. Only four of the five axes are servo controlled as the gripper needs only to be either holding or releasing.

The gripper is activated by a motor turning a lead screw which then pulls together the jaws. To hold an object IC9a is triggered in a manner similar to the enabling of the data latches. This monostable then provides a signal for about 2 seconds, as determined by R25, C14, which causes IC10 to apply a voltage to the motor to pull in the jaws. When an object is seized the motor will stall but the amplifier is fully protected and as the stall period is less than 2 seconds no overheating occurs. On triggering IC9b the motor is driven the opposite way until it stalls at the jaws fully open position. Gripper operating commands could be POKE 65477,0 to hold and POKE 65478,0 to release, though this data as indicated by 0 is quite irrelevant and anything between 0 and 255 could be written. If the address allocated to axis 0 (servo circuit A) is A then axis 1 is A + 1, axis 2 is A + 2, axis 3 is A + 3, hold is A + 5 and release is A + 6.

The rotation shoulder and elbow motors take up to about 1A each and the other two motors up to about 0·5A each. The reference voltage for the DAC and the position sensing potentiometers comes from IC1 which provides excellent stability. The amplifiers requirements however are non-critical and an unstabilised supply is entirely adequate. The circuit shown (Fig. 7) provides ± approximately 9V. The supply is sited in the robot base where, as well as providing useful ballast at the rear of the base the mains connections are fully enclosed. The interface board is therefore free of mains and is safely operated whilst unenclosed and closely connected to the computer.

Next Month: Assembly, testing and calibration

FREE! READERS' ADVERTISEMENT SERVICE

PE BAZAAR

RULES Maximum of 16 words plus address and/or phone no Private advertisers only (trade or business ads. can be placed in our classified columns). Items related to electronics only. No computer software. PE cannot accept responsibility for the accuracy of ads. or for any transaction arising between readers as a result of a free ad. We reserve the right to refuse advertisements Each ad. must be accompanied by a cut out valid 'date corner' Ads will not appear (or be returned) if these rules are broken.

VALVES, unused assortment. Details Oxford (0865) 779855. Mr. G. Dean, 66 Fern Hill Road, Oxford.

ZX81 16K, Micro Gen. Joysticks, two books and software. Best offer taken. Tel: 01-556 5994. Michel Nair, 114 Richmond Road, Leytonstone, London E11.

2 × 61 NOTE keyboards or the whole PW valved organ as is. W.H.Y. acceptable. A. Johnson, 1 Babbacombe Road, St. Yvechale, Coventry CV3 5PE.

WANTED: BF900, BF494, Chokes: 4·7mH (TOKO), 47mH. M. Ekbatani, 95 Nursery Road, Cheadle Hulme, Cheshire. Tel: 061 485 4493.

RADIO telephone Cambridge Boot Cambridge Dash Mount £25 each Vanguard No control unit £10. Edwards, 2 Beach Road, Burton Bradstock, Bridport, Dorset DT6 4RF. Tel: 0308 89625.

POCKET computer—Sharp PC1211 with cassette interface and printer only £50. Phone: 01-876 6661.

COMMUNICATIONS Receiver, 2–20MHz, Ex R.A.P., calibrator, variable selectivity, 3kHz readout, mains p.s.u., R1475, working well, £48. Tel: Cambridge 860150.

MULTIMETER with metal case £15 incl. postage. Tel: 01-554 2913 Evenings.

UK101 Mon 2, 8K, Marrick sound generator, software. Swap for PE string ensemble or similar. Tel: Newcastle 582449.

ZX80 Computer with leads transformer manual etc. £60 ono. Tel: Glyndwr 310 after 6p.m. Terry J. Bluck, 2 Maes Owain, Glyndyfrdwy, Nr. Corwen, Clwyd.

CB TRANSCEIVER, Commtron Nato CXX. £40 plus small straight forty rig or £85. Tel: 061 998 9109.

TANDBERG 3541X, Mint, unused, £90, SME FD200 Damper £12. Pair monitor audio 7·5m cable £12. Unopened. Tel: (07605) 402.

110V 1kW mains transformer with voltmeters/fully enclosed with sockets and carrying handle. Buyer collects. Offers. C. H. Kaufman, "Spring Grove", Sledgate Drive, Wickersley, S. Yorks S66 0AW. Tel: (0709) 548564.

CLEF Bandbox, fully complete working £265 o.n.o. Phone: 0233 812406. C. Maxwell, "Red Tiles", Brook, Ashford, Kent, TN25 5PG.

WANTED back issues Practical Electronics from June 1979—till July 81 any price paid. I. V. Olver, 11 Clarkes Close, Deal, Kent CT14 9JE. Tel: 03045-64445.

VOLTAGE tester probe £5. Transistor checker £12. Signal injector £6. Tel: 01554 2913 Evenings.

2708 EPROM's, little used, erased, still some left at £1·50 each. First come first served! Newnham, 21 Welbeck Avenue, Ilkeston, Derbyshire, DE7 4NL. Tel: Ilkeston (0602) 304339.

32K DYNAMIC RAM board, suitable for PET, UK101 etc. £40. Also PE/Technomatic interface boards £40. S. Riddle, St. Marshalswick Lane, St. Albans, Herts AL1 4UT.

SELENIUM bridges, One 25A, One 12A, fifty $\frac{1}{2}$A, sell or swap for any working oscilloscope tube. Mark Daniels. Tel: Leicester 823249 (After 5p.m.)

CRT-lin GEC E4103/B/4 + Data £5; Morse-key £2; two Army hand-telephones No. 2 £6; Variac non-working £2. D. L. Buckley, 142A Lynton Road, West Acton, London W3. Tel: 01-993 3123.

Please publish the following small ad. FREE in the next available issue. I am not a dealer in electronics or associated equipment. I have read the rules. I enclose a cut-out valid date corner.

Signature .... Date ....

Please read the RULES then write your advertisement here—one word to each box. Add your name, address and/or phone no.

COUPON VALID FOR POSTING BEFORE 10 DEC. 1982.
(One month later for overseas readers.)

SEND TO: PE BAZAAR, PRACTICAL ELECTRONICS, WESTOVER HOUSE, WEST QUAY ROAD, POOLE, DORSET BH15 1JG.

BLOCK CAPITALS PLEASE

Name & Address:			

For readers who don't want to damage the issue send a photostat or a copy of the coupon (filled in of course) with a **cut-out valid** "date corner"

PE BAZAAR DECEMBER '82

PE MICROGRASP

PART 2

RICHARD BECKER

IN this final part the order of assembly is detailed together with testing and calibration procedures.

ASSEMBLY

Construction of the robot is very easy but the order of assembly is fairly important particularly when putting the arms together. Also if it is not to tear apart its wiring then the recommended wiring scheme should be followed.

To assist with this, holes are provided at strategic points for anchoring the wiring with cable ties.

A good starting point is the base plate on which are fitted the power supply and the rotation position sensing potentiometer (Fig. 8). Next take off the cover of one of the gearboxes, turn round the exit side of the drive shaft, fit on it the smaller gear together with its mounting bush and nut, fit the motor loosely on the top plate, screw the side panels onto the base and fit the top plate. Special screws which roll threads in the steel in which they engage are used on all the panels. The shoulder rotation shaft and the larger gear can now be fitted and the motor tightened in position keeping the gears firmly enmeshed.

The arms are constructed in a sandwich arrangement with the lower arm sides fitting round the upper arm and the shoulder support bracket. First assemble the gripper components i.e. the jaws, gripper mounting plate, motor etc. as shown in Fig. 4. On one of the upper arm side pieces fit the wrist motor and a shaft securing bush and on the other side piece fit the wrist position sensing potentiometer. The two sides can now be brought together sandwiching the counterbalance weight and the gripper assembly. Next fit the shoulder support bracket, screw on it the other shaft securing bush and fit to the lower arm side pieces the motors, counterbalance weights and potentiometers.

The side pieces can now be brought together round the upper arm assembly and the shoulder support bracket, holding them together with a stud through them at what will be the rear end of the machine. The wrist motor is on the right hand side. Secure the gear box drive shafts but not the potentiometer shafts and move each axis to the centre of its travel—gripper, upper arm and lower arm all in line about 60° above the horizontal with the arm pointing forwards.

Set each potentiometer to its centre position i.e. equal resistance between the centre tag and each of the outer ones by use of a screwdriver in the adjustment slot and secure the shafts.

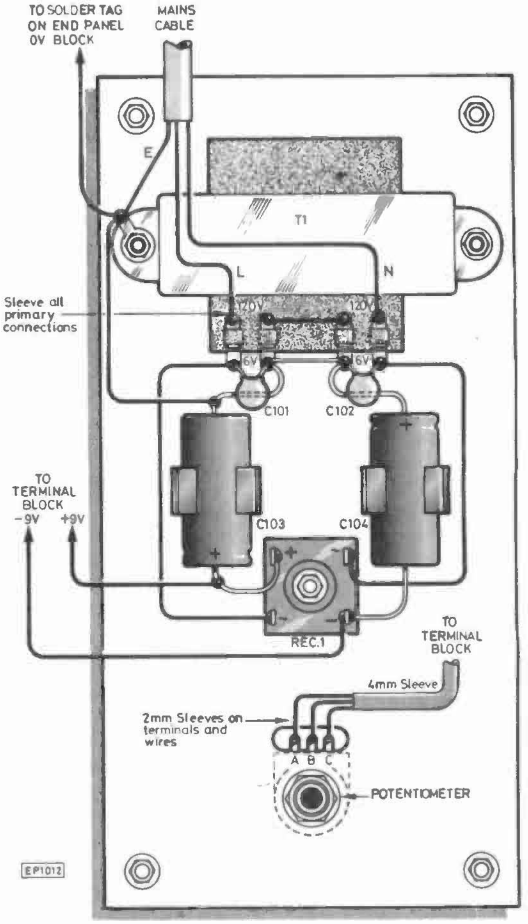

Fig. 8. Power supply component assembly and wiring on base plate

The robot can now be wired up to terminal blocks fitted to the rear end panel following the diagrams in Figs. 11, 12 and the wiring table below. The wires in the 6mm sleeve pass through holes in the bottom of the shoulder support bracket before passing through grommets in the top plate. Sufficient slack must be allowed for 180° of movement of the arm.

Assembly of the interface board (Fig. 11) requires little comment except to say that it is plated-through i.e. both sides of the board carry tracks with connections between the two sides being made by the conductive coating in the holes

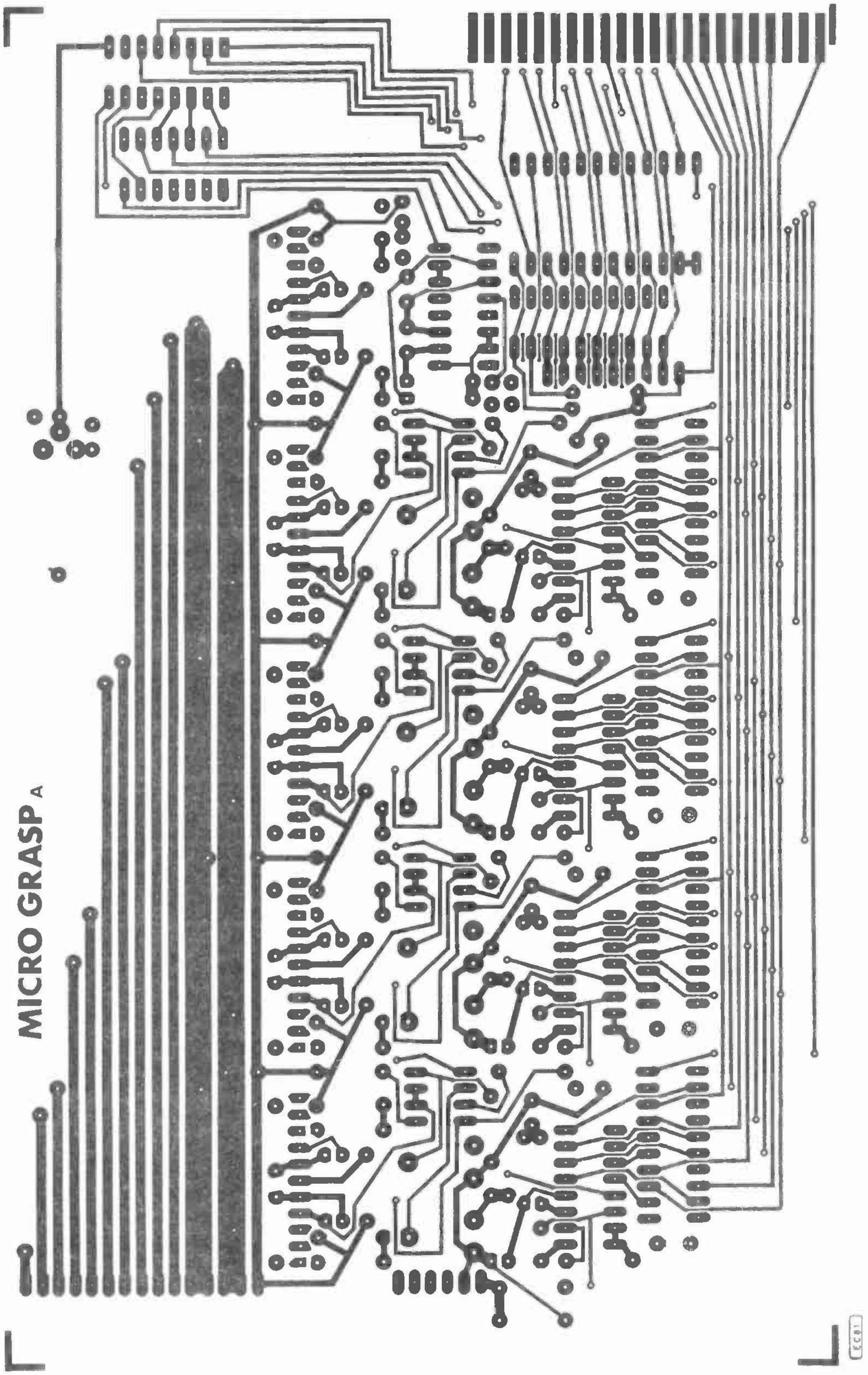

Fig. 9. Topside of printed circuit board

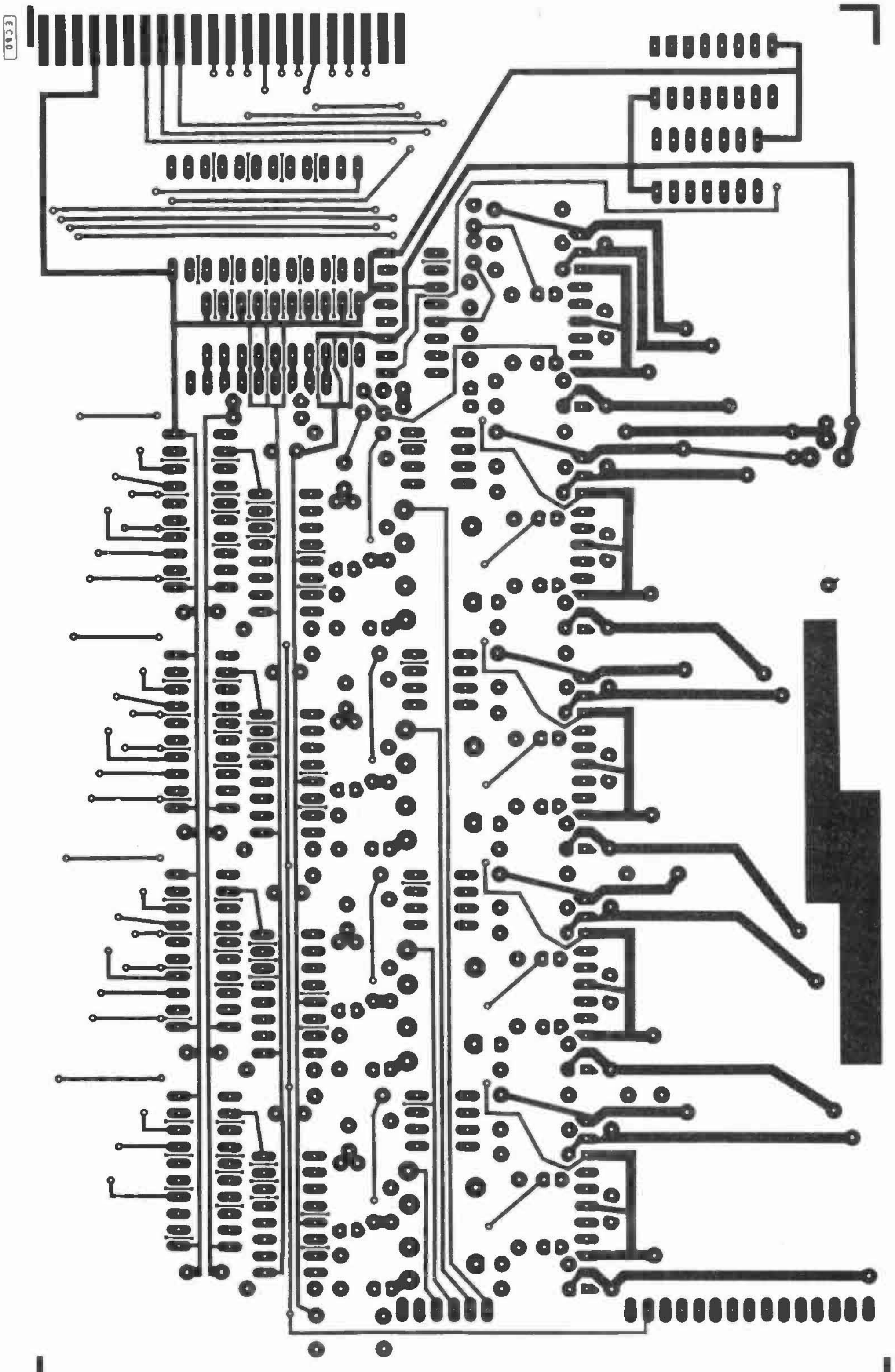

Fig. 10. Under side of printed circuit board

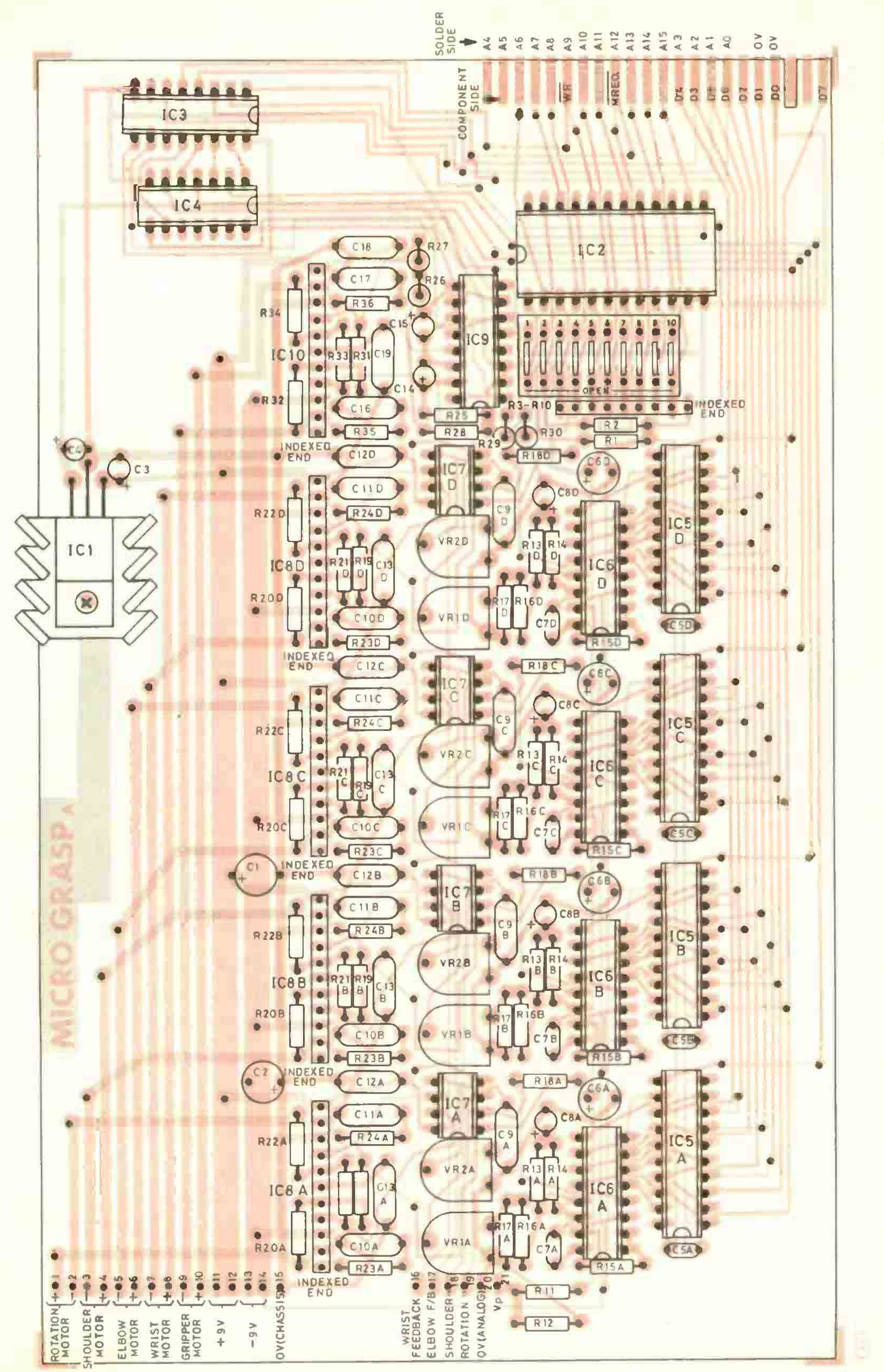

Fig. 11. Track and component layout for completed board

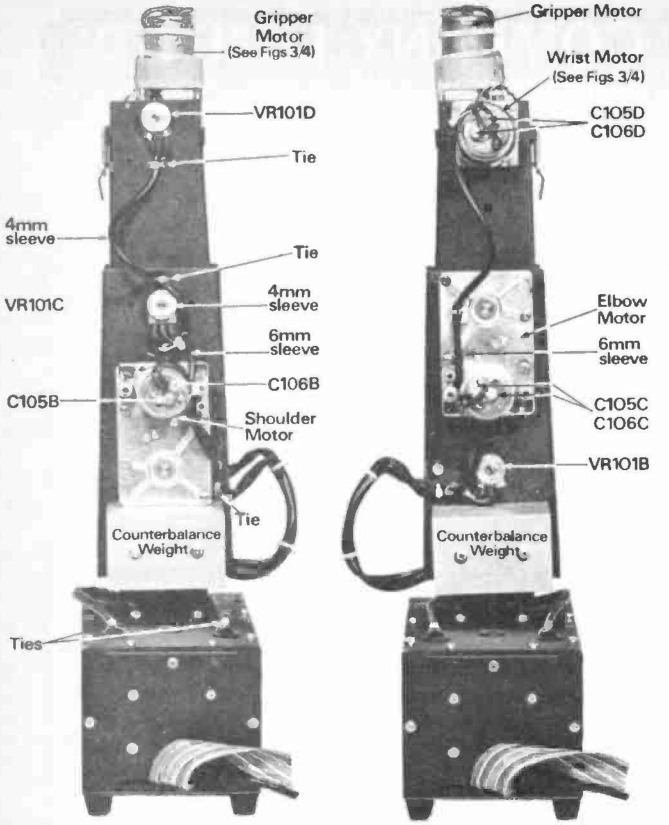

Component assembly and wiring of left and right sides respectively of Micrograsp

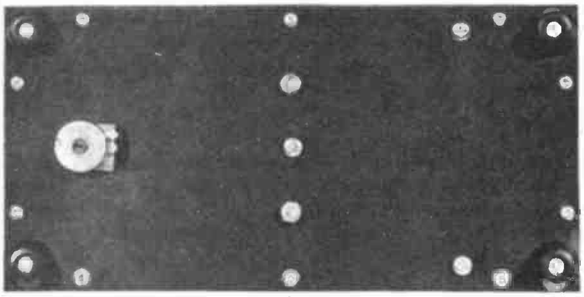

Underside of base with VR101A visible

so that no link-through pins are required. The board is wired in with 23 way (24 or 25 way reduced) ribbon cable to the terminal block leaving temporarily free connectors 2, 4, 6, 8, 10.

TESTING AND CALIBRATION

Power up the robot and interface board without the computer connected and with all the i.c.s unplugged and check the power rails for ±9V approximately and ±5V from the regulator. Assuming all is well, switch off and plug in the i.c.s. Check again and switch off.

Connect to the computer, switch on the robot followed by the computer and check the computer's operation is unaffected by the interface board. If it is, then there is probably a short across the address or data lines on the board.

Set all the switches to open, rotate each VR1 fully anticlockwise and enter POKE 65472,0. Each output of IC5a will now be low and IC7a pin 1 will be close to 0V. Enter POKE 65472,255 and each output will change to high and pin 1 will change to close to +1V. Enter POKE 65472,128 and pin 1 will change to 0·5V. Similar results will be obtained on servo circuits B, C, D using addresses 65473, 65474, 65475 respectively. Address the monostables with POKE 65477,0 and POKE 65478,0 and IC9 pins 13 and 5 respectively will go high for about 2 seconds and then return to low.

Connect the rotation motor (connector 2) whilst the robot is switched off, turn each preset to its midway position and switch on. The arm will move to some extent and come to rest peaceably i.e. without being held back by its cables. Turning VR1A will result in the arm changing its position, Return VR1A to its midway position, successively enter data of 0 and 255 i.e. minimum, and maximum codes and adjust VR1A, VR2A for 180° of movement symmetrical about the forward facing position.

Repeat this procedure one axis at a time for the other three servo controlled axes adjusting for the shoulder to move between almost touching the end stop and about 10° below horizontal and for the elbow and wrist joints to have 180° movement. Finally connect and check the gripper motor circuit and after fitting the end panels the robot is ready for use.

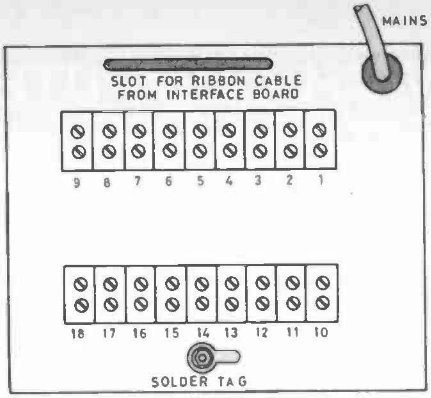

Fig. 12. Numbered terminal blocks fitted to the rear end panel. The wiring table shows connections from the robot to the p.c.b. (Fig. 11)

TERMINAL BLOCK	DESTINATION	WIRE COLOUR	PCB CONNECTION POINT
1	ROTATION MOTOR RED	GREY	1
2	ROTATION MOTOR BLACK	ORANGE	2
3	SHOULDER MOTOR BLACK	BLUE (LEFT)	3
4	SHOULDER MOTOR RED	BLACK (LEFT)	4
5	ELBOW MOTOR BLACK	ORANGE (RIGHT)	5
6	ELBOW MOTOR RED	GREY (RIGHT)	6
7	WRIST MOTOR BLACK	BROWN (RIGHT)	7
8	WRIST MOTOR RED	GREEN (RIGHT)	8
9	GRIPPER MOTOR BLACK	BLACK (RIGHT)	9
10	GRIPPER MOTOR RED	BLUE (RIGHT)	10
11	+VE OF POWER SUPPLY	RED	11,12
12	−VE OF POWER SUPPLY	BLUE	13,14
SOLDER TAG	SOLDER TAG ON BASE PLATE	BLACK	15
13	VR101 D TAG B	WHITE (LEFT)	16
14	VR101 C TAG B	YELLOW (LEFT)	17
15	VR101 B TAG B	VIOLET (RIGHT)	18
16	VR101 A TAG B	GREEN/YELLOW	19
17	0V(analog) VR101A TAG C " " VR101B TAG A " " VR101C TAG A " " VR101D TAG A	PINK PINK (RIGHT) PINK (LEFT) PINK (LEFT)	20
18	Vp VR101A TAG A Vp VR101B TAG C Vp VR101C TAG C Vp VR101D TAG C	RED RED (RIGHT) RED (LEFT) RED (LEFT)	21

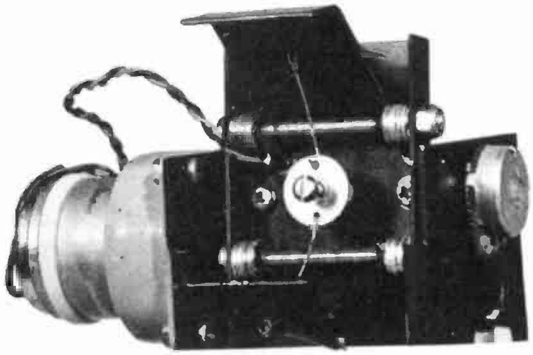

Showing the jaws of the gripper fully expanded