United States Patent [19]

Maddox et al.

[11] **Patent Number: 4,710,020**

[45] **Date of Patent: Dec. 1, 1987**

[54] **BEACON PROXIMITY DETECTION SYSTEM FOR A VEHICLE**

[75] Inventors: **James F. Maddox**, Arlington; **Mark B. Kadonoff**, Somerville, both of Mass.; **Alan D. Berger**, Pittsburgh, Pa.; **Amy L. Taivalkoski**, Salem; **Robert W. George, II**, Windham, both of N.H.; **Faycal E. Benayad-Cherif**, Somerville, Mass.

[73] Assignee: **Denning Mobil Robotics, Inc.**, Woburn, Mass.

[21] Appl. No.: **864,292**

[22] Filed: **May 16, 1986**

[51] **Int. Cl.**[4] **G01C 3/00**; B25J 5/00

[52] **U.S. Cl.** **356/1**; 901/1; 364/424; 180/167

[58] **Field of Search** 356/1, 4, 141; 342/46; 901/1; 364/424, 444; 180/167, 168

[56] **References Cited**

FOREIGN PATENT DOCUMENTS

60-63698 1/1985 Japan .

OTHER PUBLICATIONS

Kujiwara, T., "Developments of a Mobile Robot for Security Guard," 15th ISIR, pp. 271–278, 1984.

"Towards Autonomous Vehicles," 1984 *Annual Research Report,* Robotics Institute, Carnegie-Mellon University, pp. 33–49, 1985.

Primary Examiner—Stephen C. Buczinski

Assistant Examiner—Linda J. Wallace

Attorney, Agent, or Firm—Joseph S. Iandiorio; Douglas E. Denninger

[57] **ABSTRACT**

A proximity detection system for determining the distance between a vehicle and a navigation beacon by resolving the altitude angle between the beacon and the vehicle and determining the distance between them. The system then defines an optimum distance between the beacon and the vehicle and compares the determined distance and the optimum distance to establish any difference between them.

24 Claims, 29 Drawing Figures

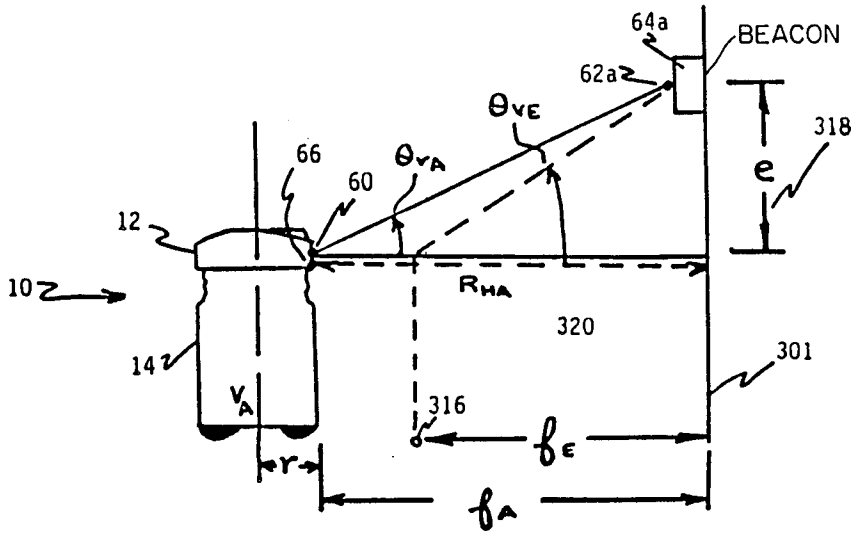

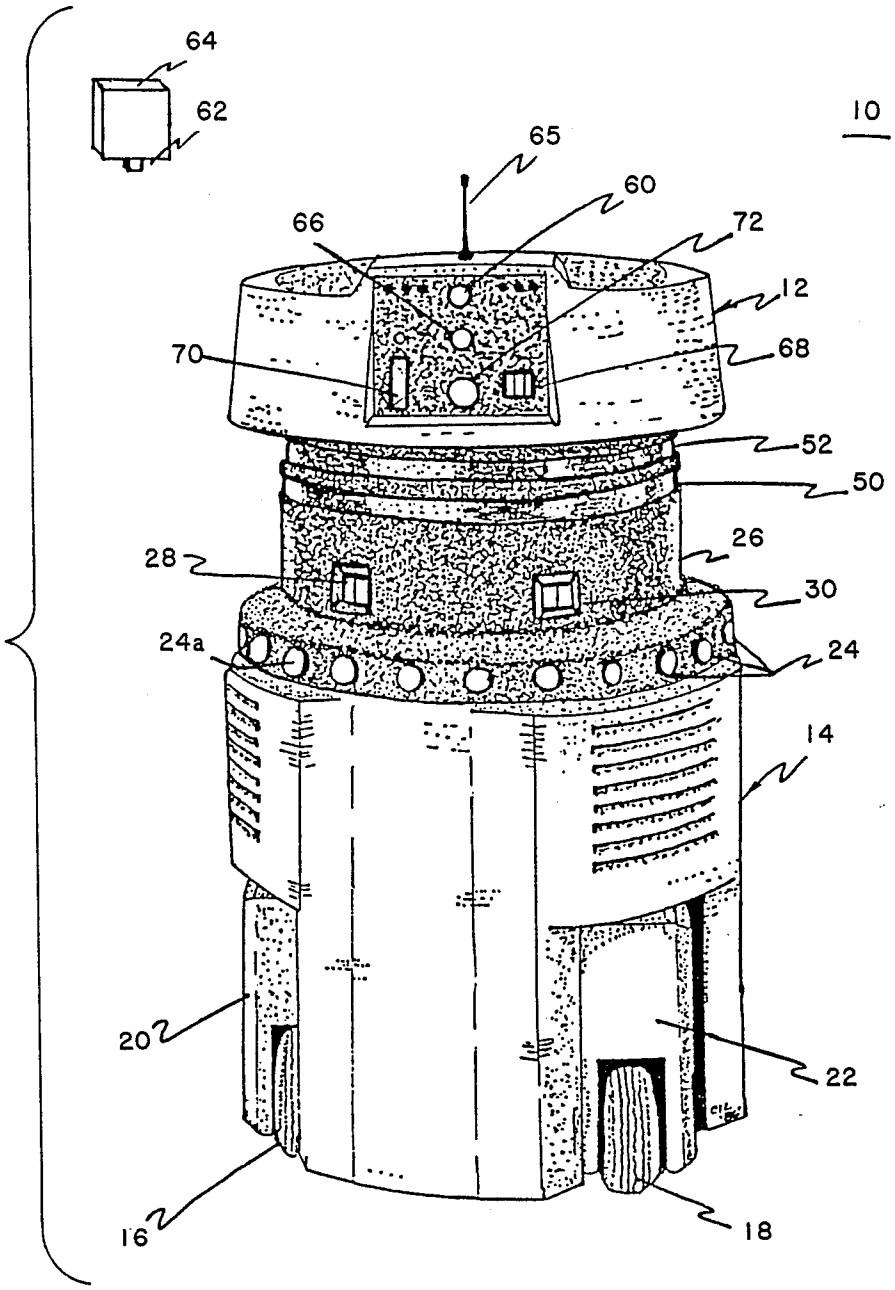

FIG. 1

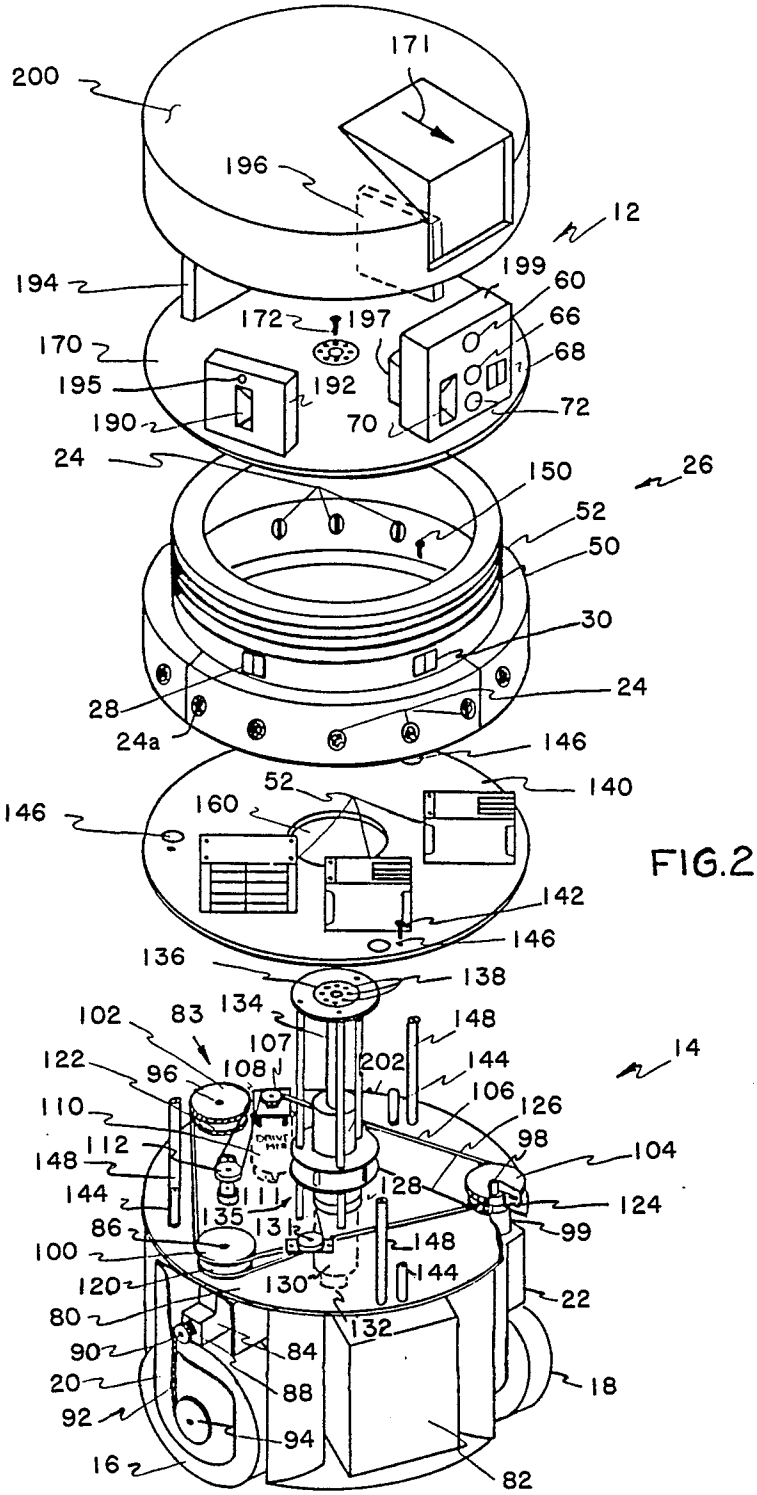
200
171
196
12
194
199
60
172
197
66
170
68
195
192
190
70
72
24
150
26
52
50
30
28
24
24a
146
140
52
160
146
142
146
136
138
134
148
102
83
107
202
144
14
122
96
108
106
126
110
98
112
104
148
128
124
144
111
135
99
86
148
100
144
120
130
22
80
132
90
84
20
88
18
92
94
16
82

FIG.2

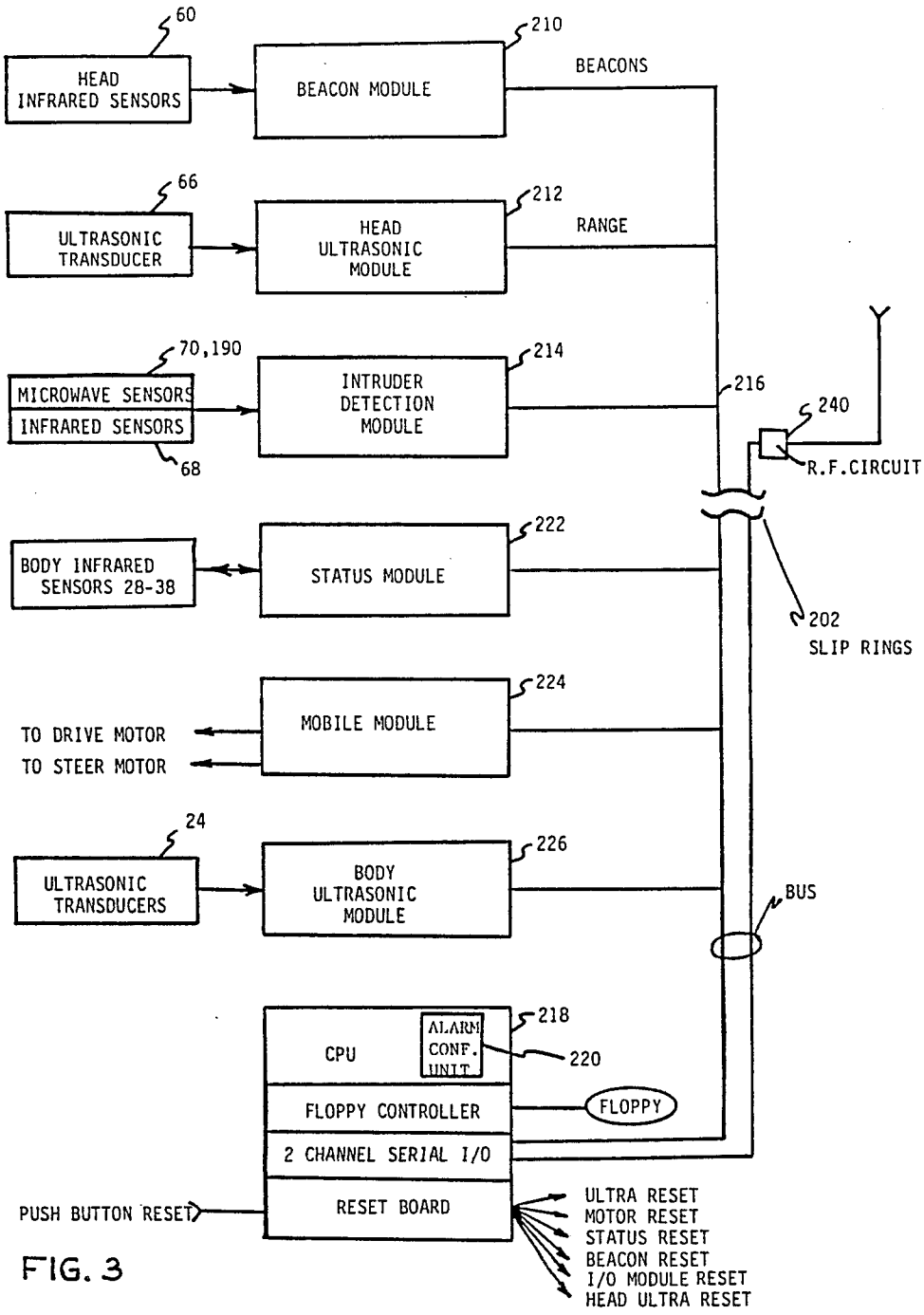
60
HEAD INFRARED SENSORS
BEACON MODULE
210
BEACONS
66
ULTRASONIC TRANSDUCER
HEAD ULTRASONIC MODULE
212
RANGE
70,190
MICROWAVE SENSORS
INFRARED SENSORS
68
INTRUDER DETECTION MODULE
214
216
240
R.F.CIRCUIT
BODY INFRARED SENSORS 28-38
STATUS MODULE
222
202
SLIP RINGS
TO DRIVE MOTOR
TO STEER MOTOR
MOBILE MODULE
224
24
ULTRASONIC TRANSDUCERS
BODY ULTRASONIC MODULE
226
BUS
CPU
ALARM CONF. UNIT
218
220
FLOPPY CONTROLLER
FLOPPY
2 CHANNEL SERIAL I/O
PUSH BUTTON RESET
RESET BOARD
ULTRA RESET
MOTOR RESET
STATUS RESET
BEACON RESET
I/O MODULE RESET
HEAD ULTRA RESET

FIG. 3

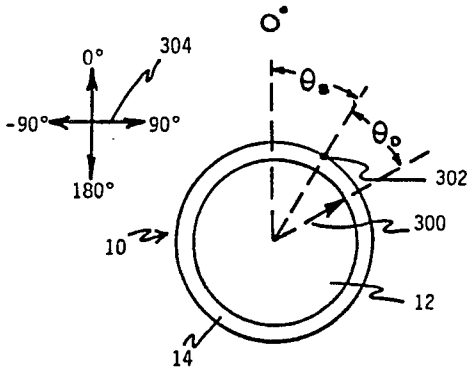

FIG. 4A

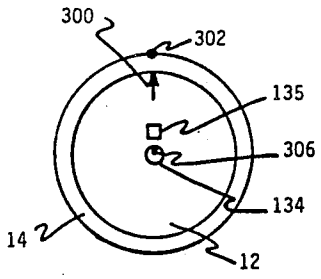

FIG. 4B

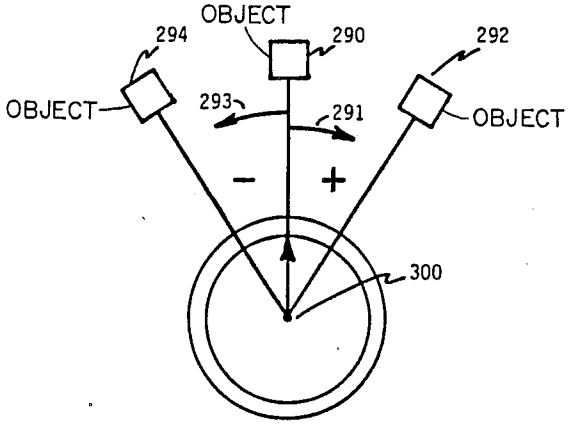

FIG. 4C

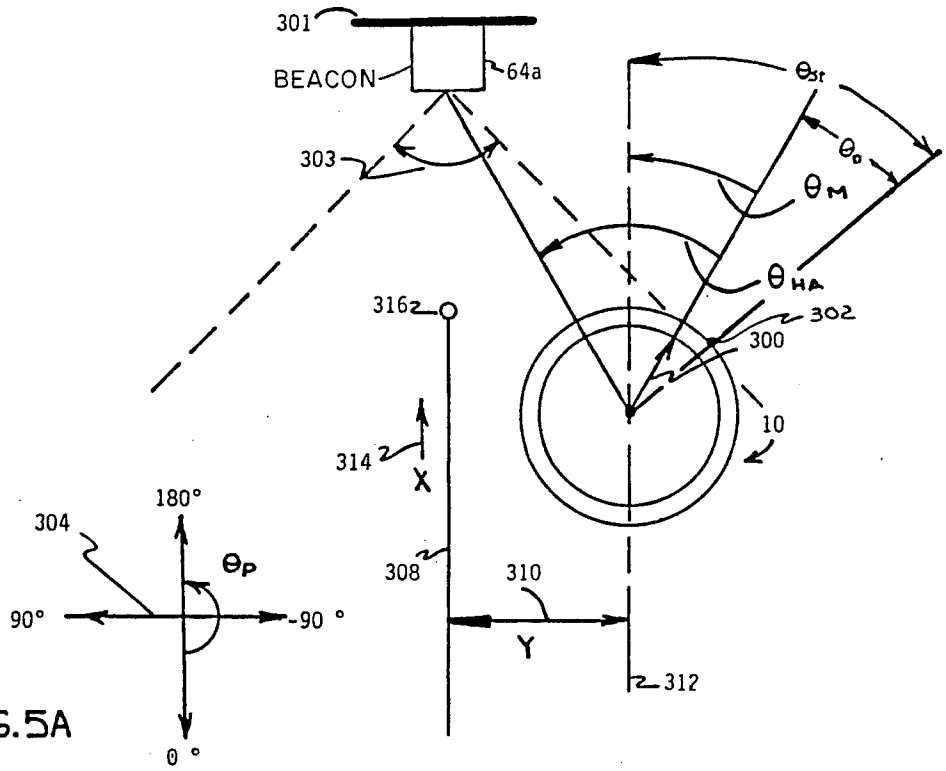
301
BEACON
64a
303
θst
θo
θM
θHA
302
300
316
10
314
X
180°
304
θP
308
310
90°
-90 °
Y
312
0 °

FIG.5A

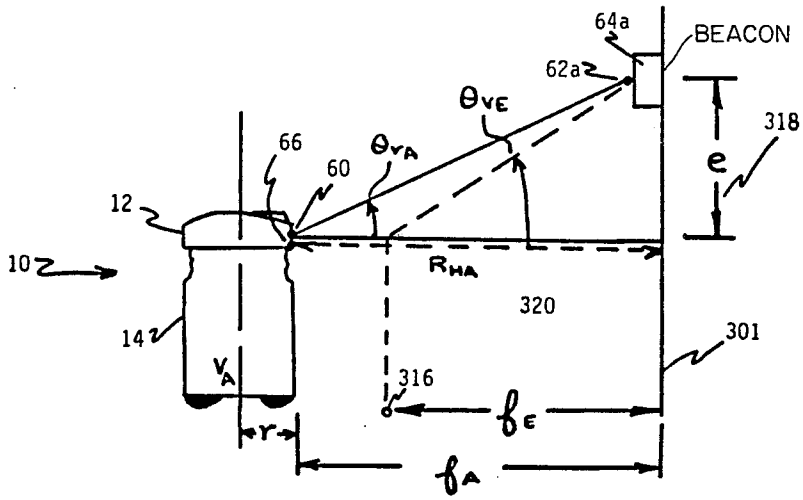
64a
BEACON
62a
θVE
318
66
θVA
60
e
12
10
RHA
320
14
301
VA
316
fE
Y
fA

FIG. 5B

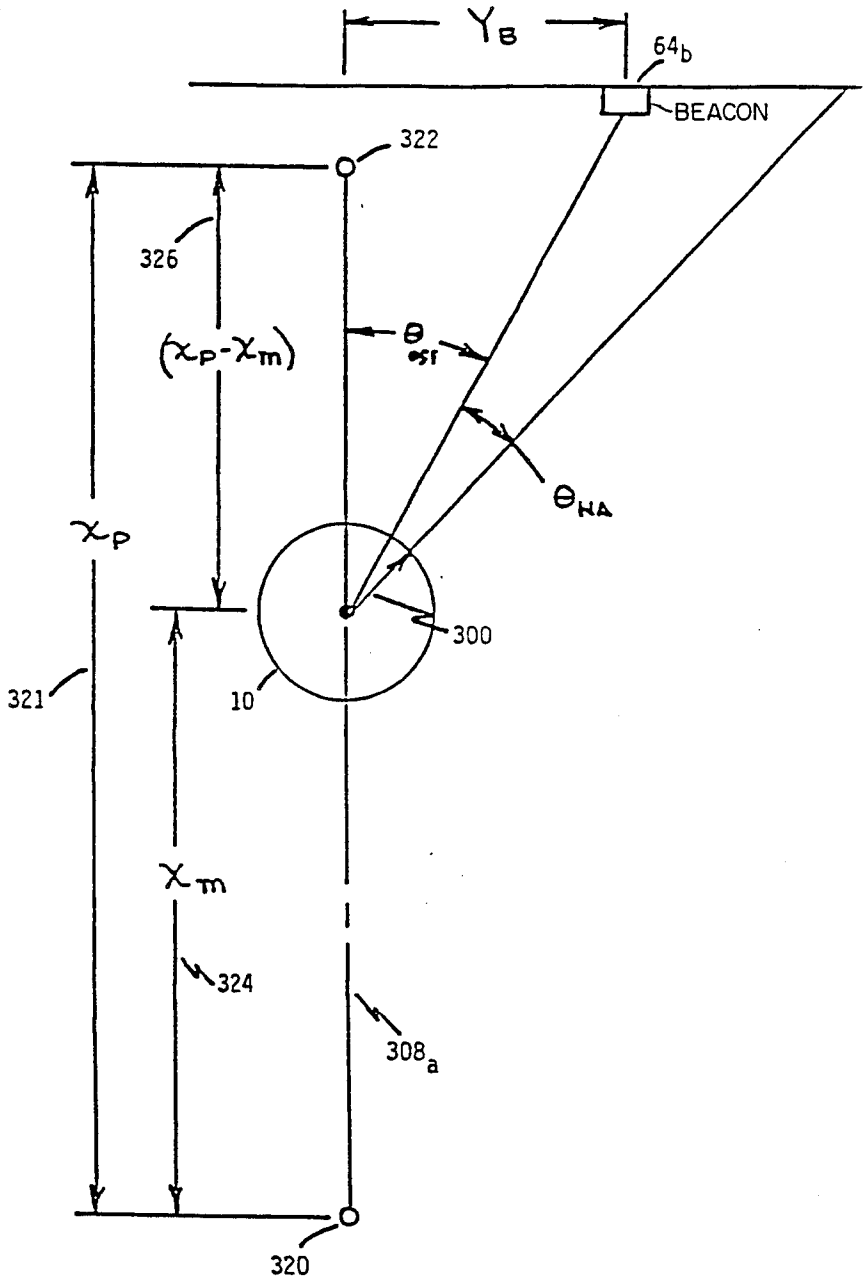
Y_B
64_b
BEACON
322
326
$(x_p - x_m)$
θ_{sf}
θ_{HA}
x_p
300
321
10
x_m
324
308_a
320

FIG. 5C

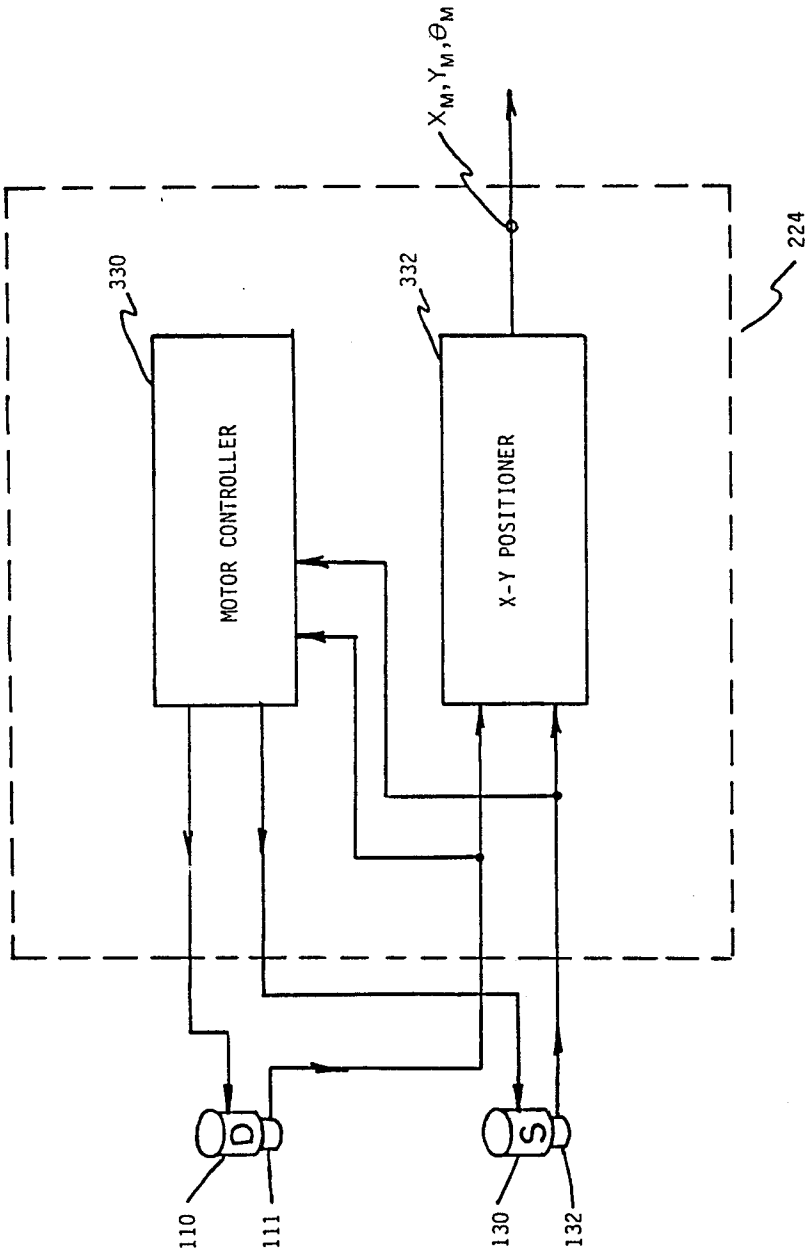
MOTOR CONTROLLER
X-Y POSITIONER
330
332
224
X_M, Y_M, θ_M
D
S
110
111
130
132

FIG. 6

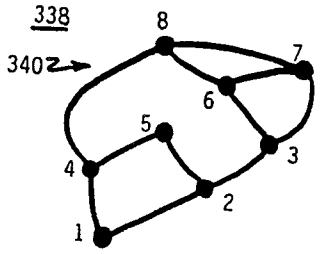

FIG. 7A

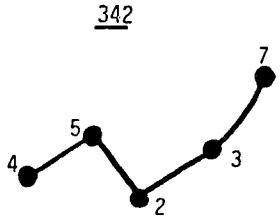

FIG. 7B

FIG. 7C

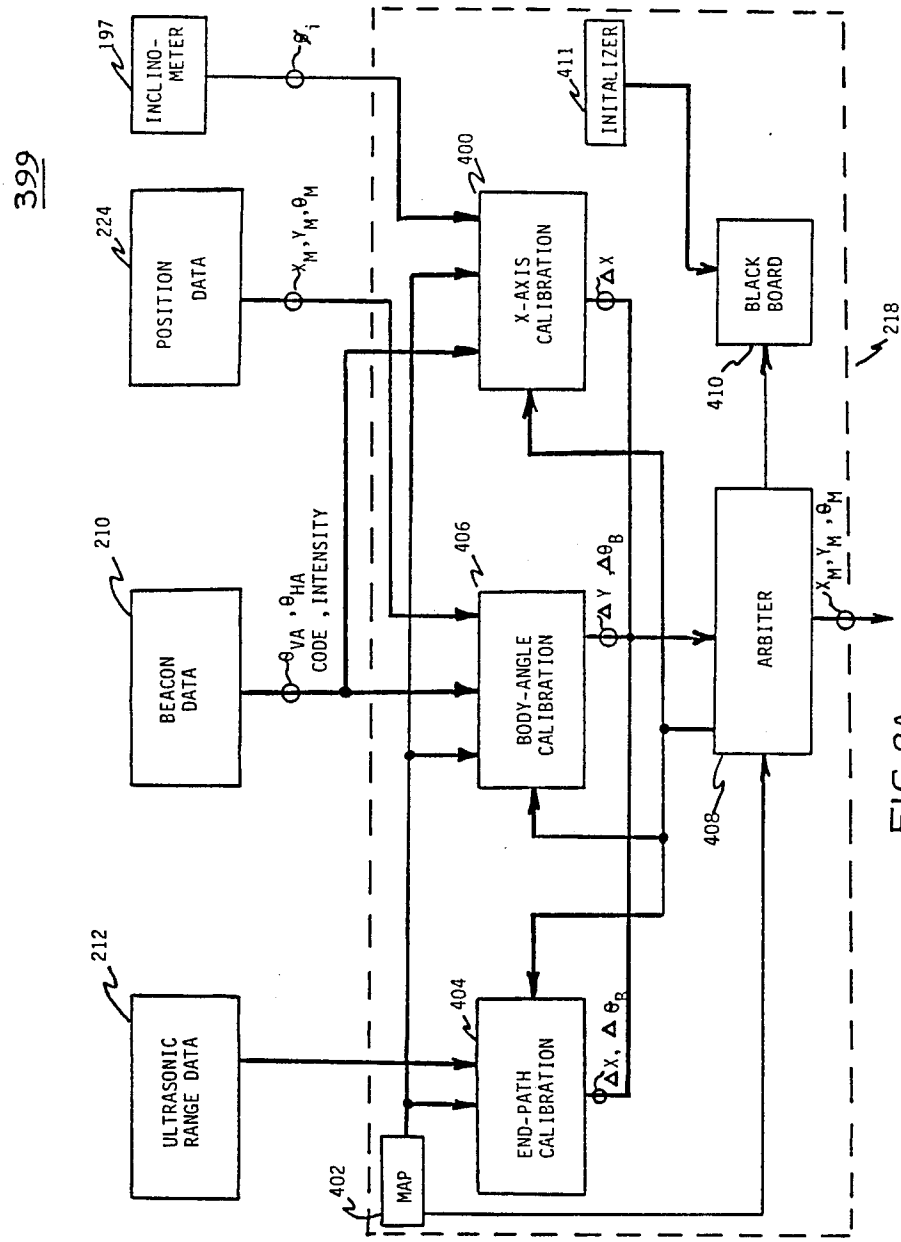
399
197
INCLINO-METER
224
POSITION DATA
210
BEACON DATA
212
ULTRASONIC RANGE DATA
402
MAP
404
END-PATH CALIBRATION
406
BODY-ANGLE CALIBRATION
400
X-AXIS CALIBRATION
411
INITALIZER
410
BLACK BOARD
408
ARBITER
218
CODE , INTENSITY

FIG. 8A

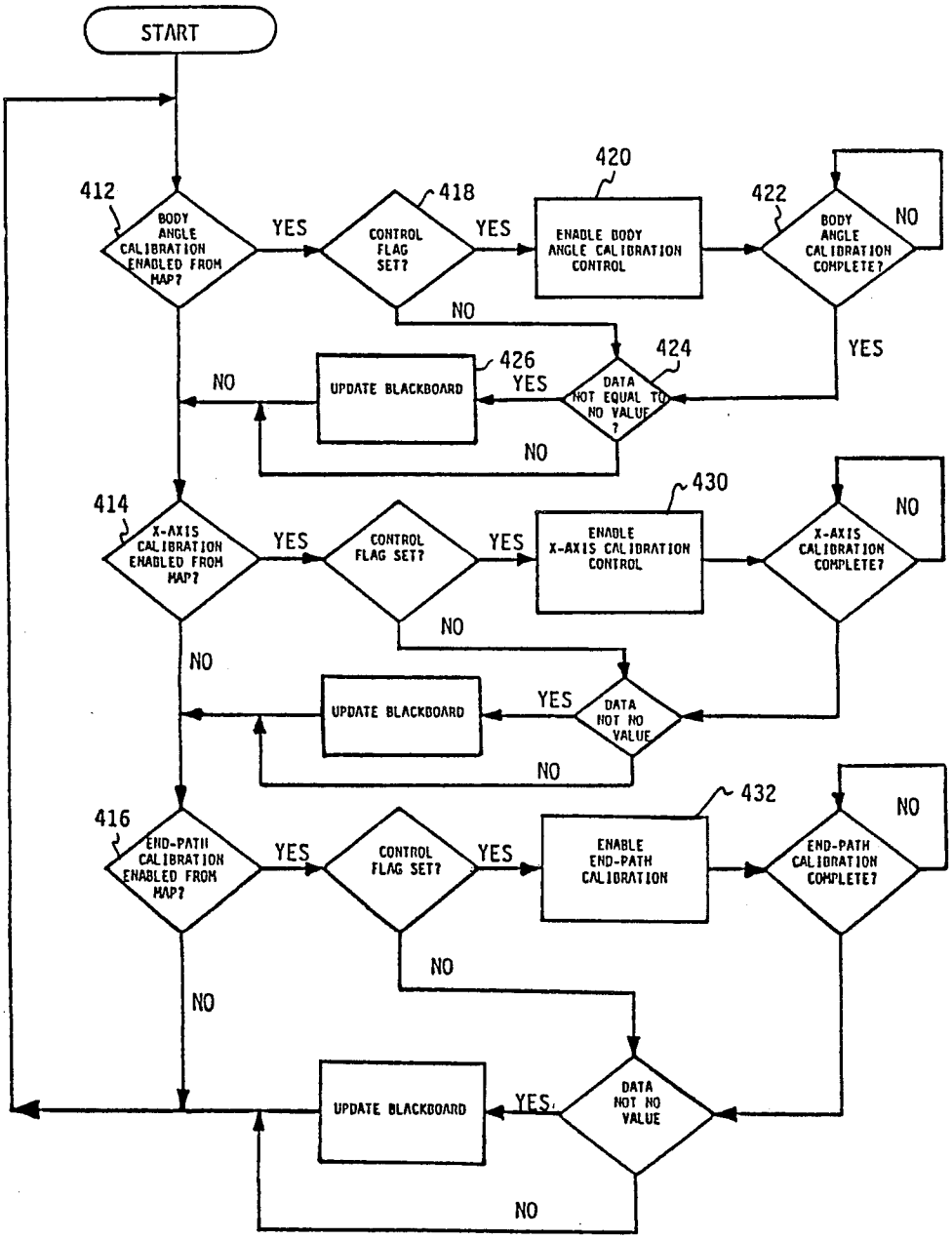
START
412
BODY ANGLE CALIBRATION ENABLED FROM MAP?
YES
418
CONTROL FLAG SET?
YES
420
ENABLE BODY ANGLE CALIBRATION CONTROL
422
BODY ANGLE CALIBRATION COMPLETE?
NO
NO
YES
424
DATA NOT EQUAL TO NO VALUE ?
YES
426
UPDATE BLACKBOARD
NO
NO
414
X-AXIS CALIBRATION ENABLED FROM MAP?
YES
CONTROL FLAG SET?
YES
430
ENABLE X-AXIS CALIBRATION CONTROL
X-AXIS CALIBRATION COMPLETE?
NO
NO
DATA NOT NO VALUE
YES
UPDATE BLACKBOARD
NO
416
END-PATH CALIBRATION ENABLED FROM MAP?
YES
CONTROL FLAG SET?
YES
432
ENABLE END-PATH CALIBRATION
END-PATH CALIBRATION COMPLETE?
NO
NO
NO
DATA NOT NO VALUE
YES
UPDATE BLACKBOARD
NO

FIG. 8B

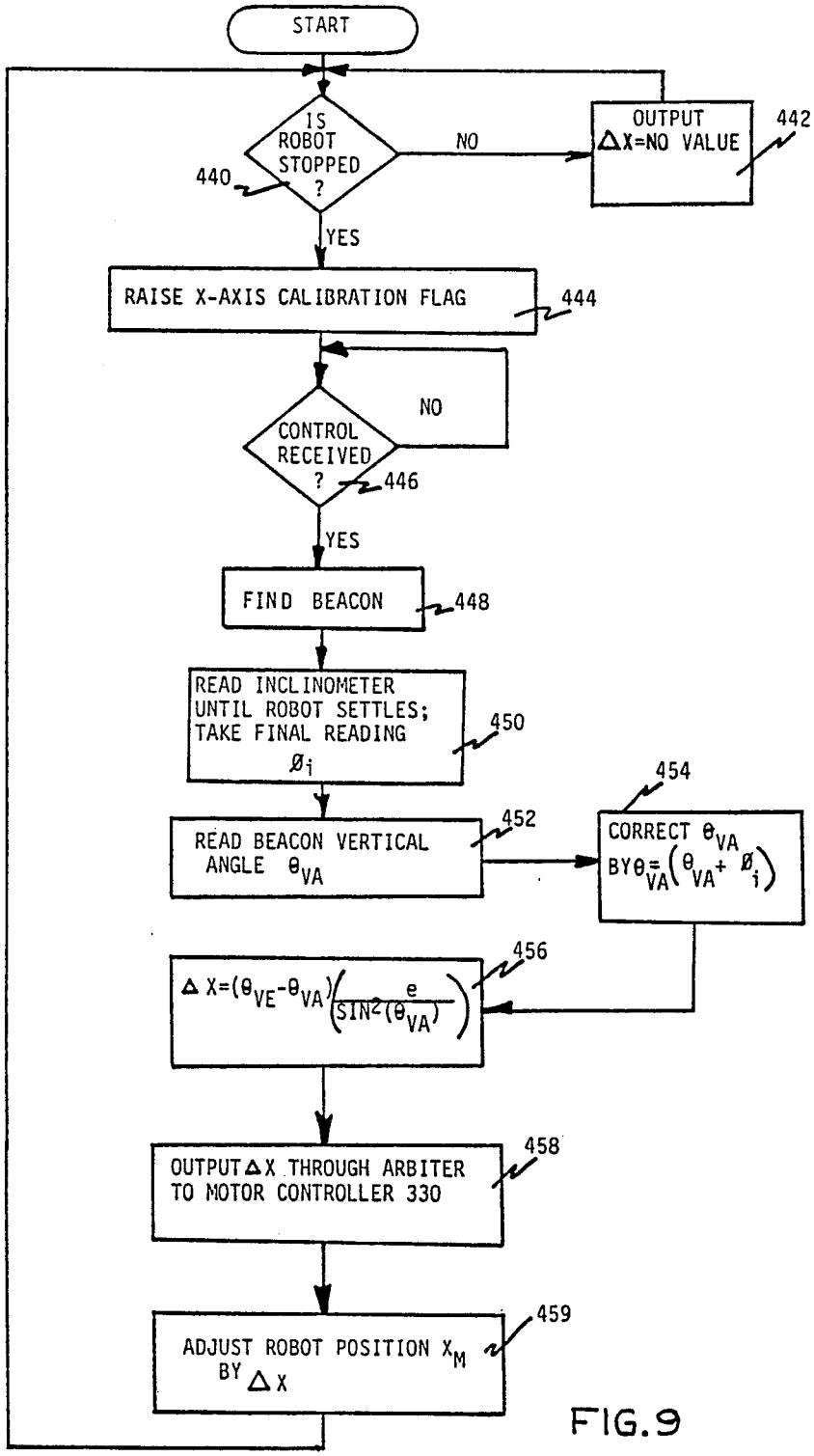
START
IS ROBOT STOPPED ?
440
NO
OUTPUT ΔX=NO VALUE
442
YES
RAISE X-AXIS CALIBRATION FLAG
444
CONTROL RECEIVED ?
446
NO
YES
FIND BEACON
448
READ INCLINOMETER UNTIL ROBOT SETTLES; TAKE FINAL READING Øi
450
READ BEACON VERTICAL ANGLE θVA
452
CORRECT θVA BY θVA = (θVA + Øi)
454
ΔX=(θVE-θVA)(e / SIN²(θVA))
456
OUTPUT ΔX THROUGH ARBITER TO MOTOR CONTROLLER 330
458
ADJUST ROBOT POSITION XM BY ΔX
459

FIG. 9

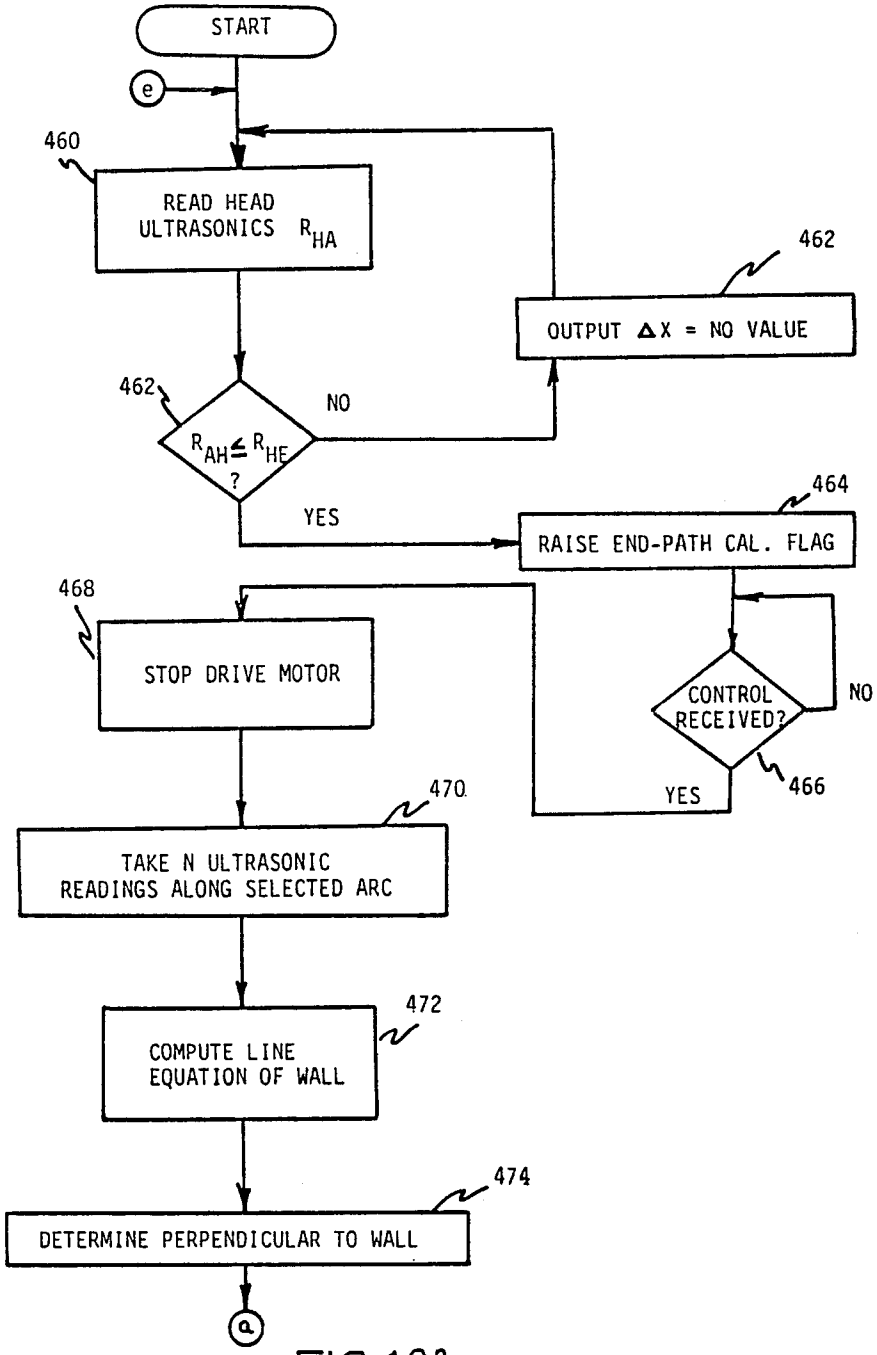
START
e
460
READ HEAD ULTRASONICS R_{HA}
462
OUTPUT ΔX = NO VALUE
462
$R_{AH} \leq R_{HE}$?
NO
YES
464
RAISE END-PATH CAL. FLAG
468
STOP DRIVE MOTOR
CONTROL RECEIVED?
NO
YES
466
470
TAKE N ULTRASONIC READINGS ALONG SELECTED ARC
472
COMPUTE LINE EQUATION OF WALL
474
DETERMINE PERPENDICULAR TO WALL
a

FIG. 10A

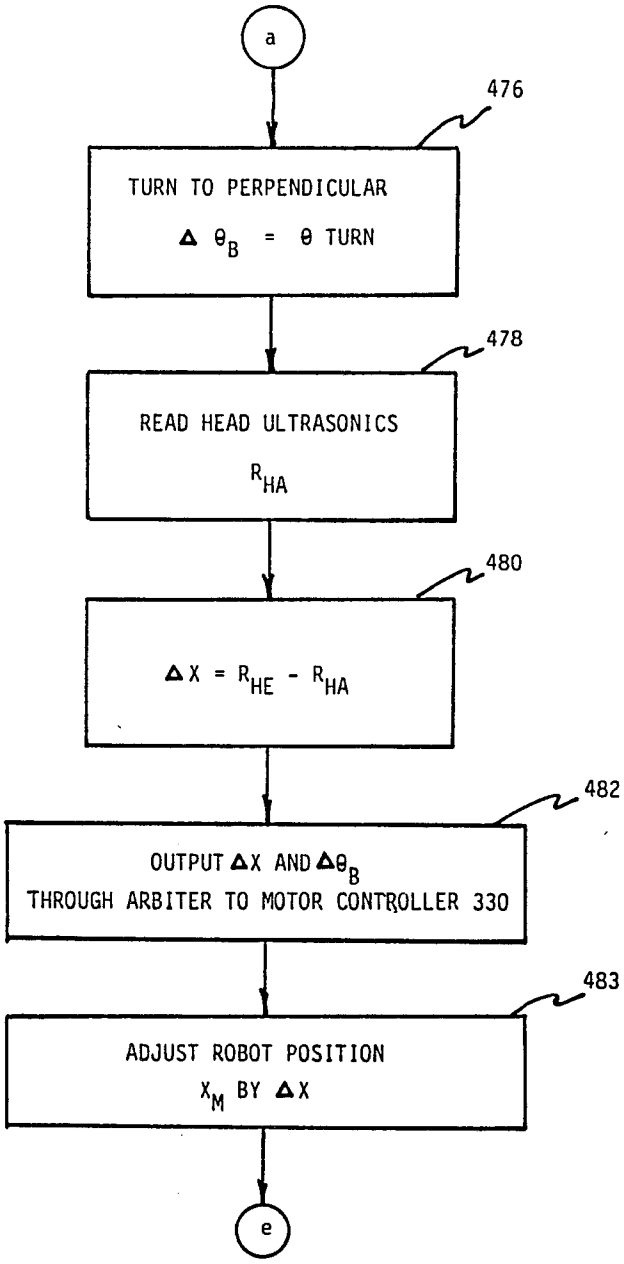
a
476
TURN TO PERPENDICULAR
Δ θB = θ TURN
478
READ HEAD ULTRASONICS
RHA
480
ΔX = RHE - RHA
482
OUTPUT ΔX AND ΔθB
THROUGH ARBITER TO MOTOR CONTROLLER 330
483
ADJUST ROBOT POSITION
XM BY ΔX
e

FIG.10B

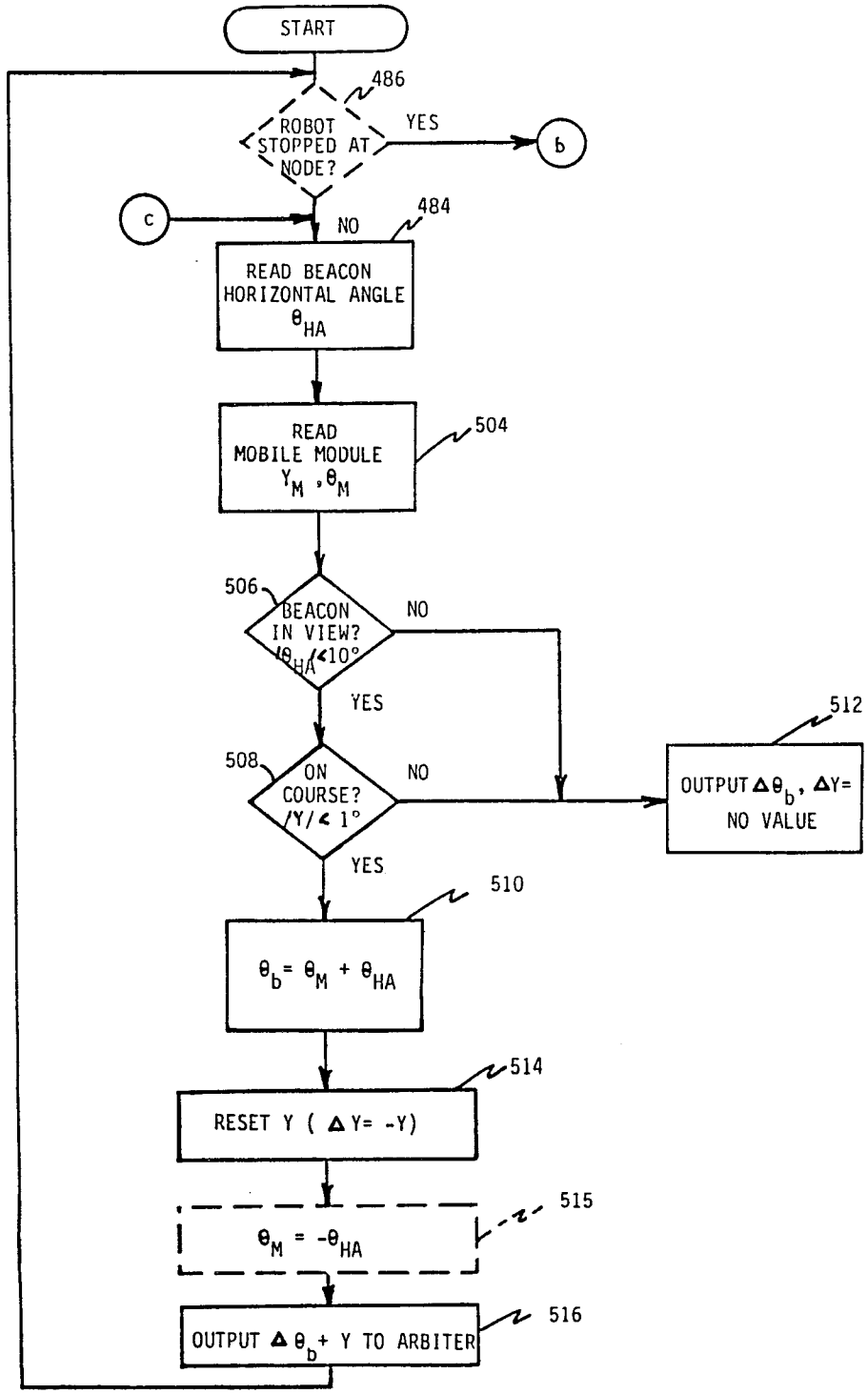
START
486
ROBOT STOPPED AT NODE?
YES
b
c
NO
484
READ BEACON HORIZONTAL ANGLE θ_{HA}
READ MOBILE MODULE Y_M, θ_M
504
506
BEACON IN VIEW? $|\theta_{HA}|<10°$
NO
YES
512
508
ON COURSE? $|Y|<1°$
NO
OUTPUT $\Delta\theta_b$, ΔY= NO VALUE
YES
510
$\theta_b = \theta_M + \theta_{HA}$
514
RESET Y (ΔY= -Y)
515
$\theta_M = -\theta_{HA}$
516
OUTPUT $\Delta\theta_b$+ Y TO ARBITER

FIG.11A

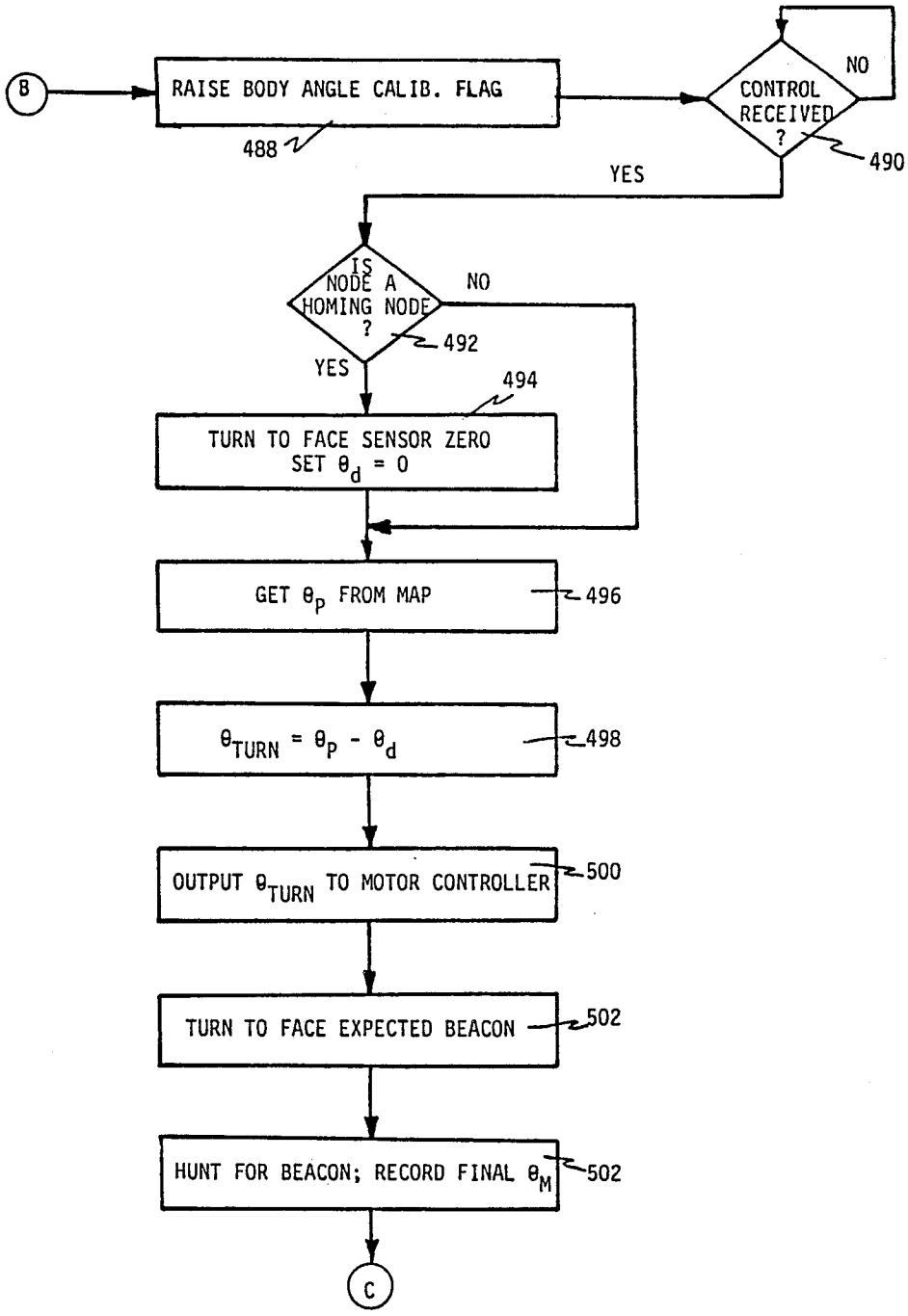
B
RAISE BODY ANGLE CALIB. FLAG
488
CONTROL RECEIVED ?
NO
YES
490
IS NODE A HOMING NODE ?
NO
YES
492
494
TURN TO FACE SENSOR ZERO
SET θd = 0
GET θp FROM MAP
496
θTURN = θp - θd
498
OUTPUT θTURN TO MOTOR CONTROLLER
500
TURN TO FACE EXPECTED BEACON
502
HUNT FOR BEACON; RECORD FINAL θM
502
C

FIG.11B

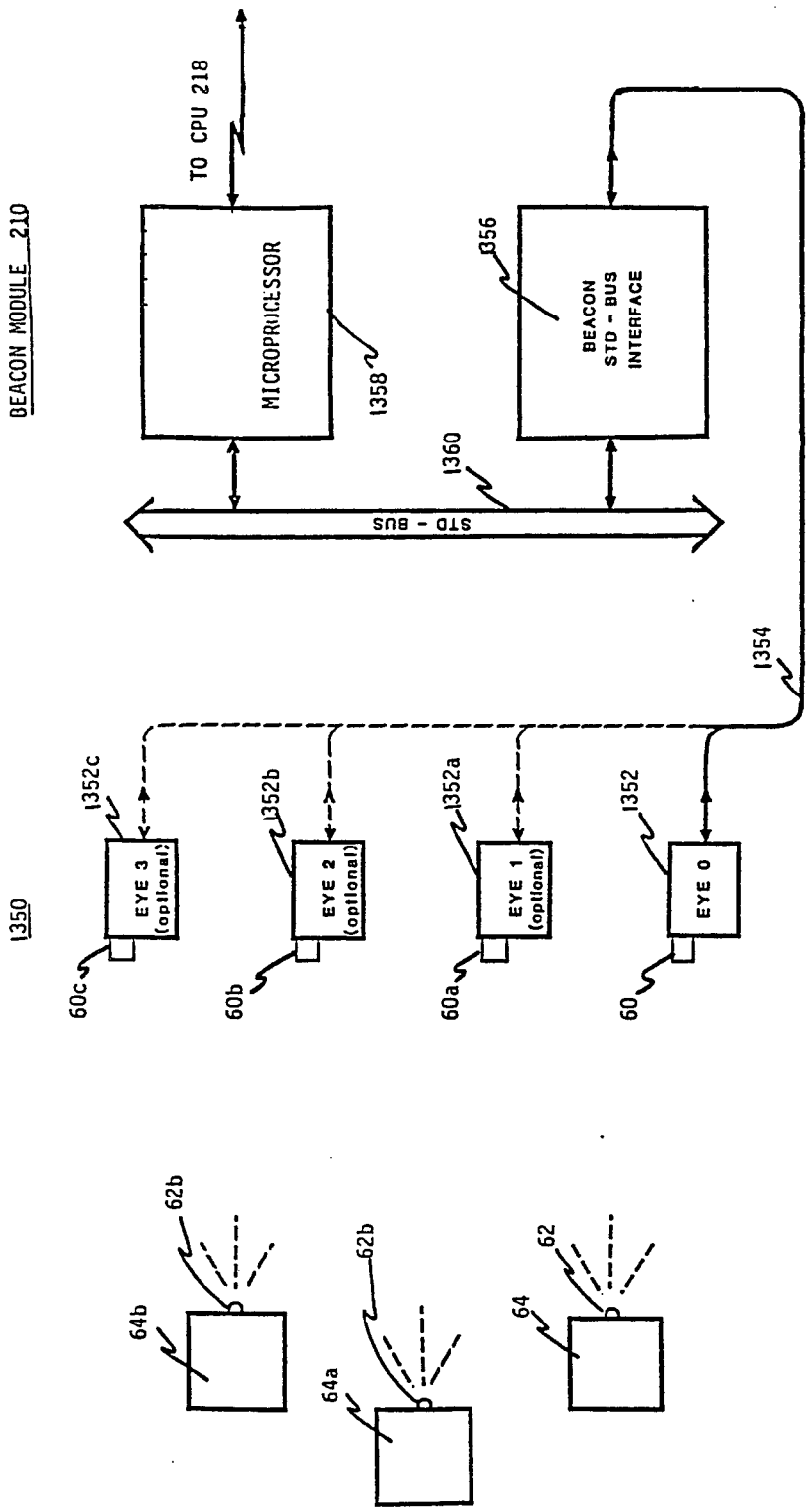
BEACON MODULE 210
TO CPU 218
MICROPROCESSOR
1358
1356
BEACON STD - BUS INTERFACE
1360
STD - BUS
1354
1350
1352c
EYE 3 (optional)
60c
1352b
EYE 2 (optional)
60b
1352a
EYE 1 (optional)
60a
1352
EYE 0
60
62b
64b
62b
64a
62
64

FIG. 12

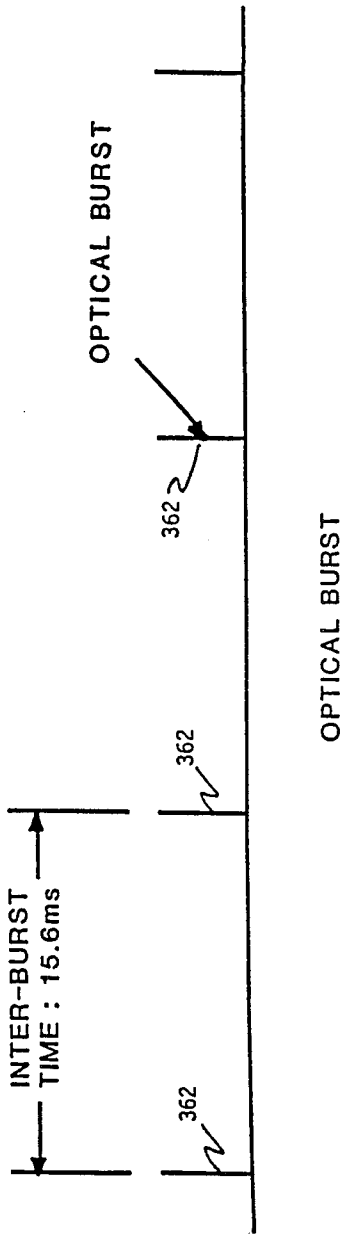
INTER-BURST
TIME : 15.6ms
362
362
362
OPTICAL BURST
OPTICAL BURST

FIG. 13

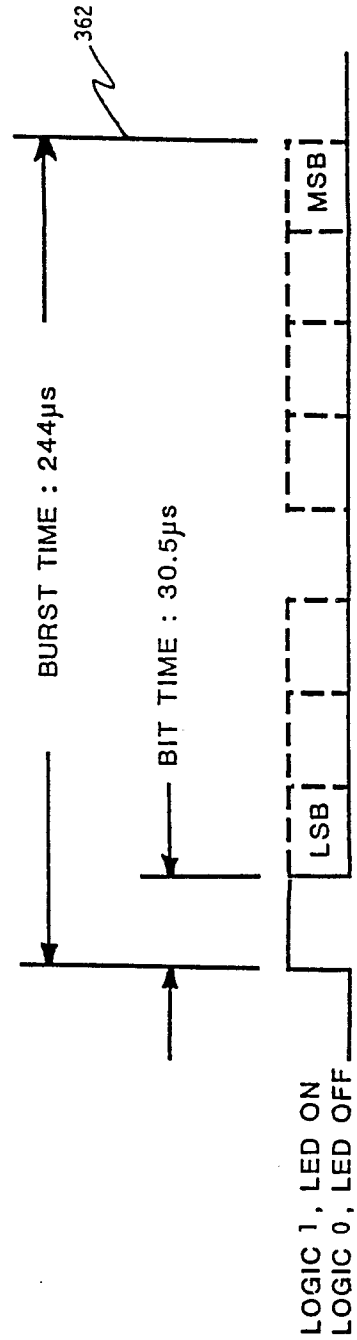
362
BURST TIME : 244μs
BIT TIME : 30.5μs
LSB
MSB
LOGIC 1, LED ON
LOGIC 0, LED OFF

FIG. 14

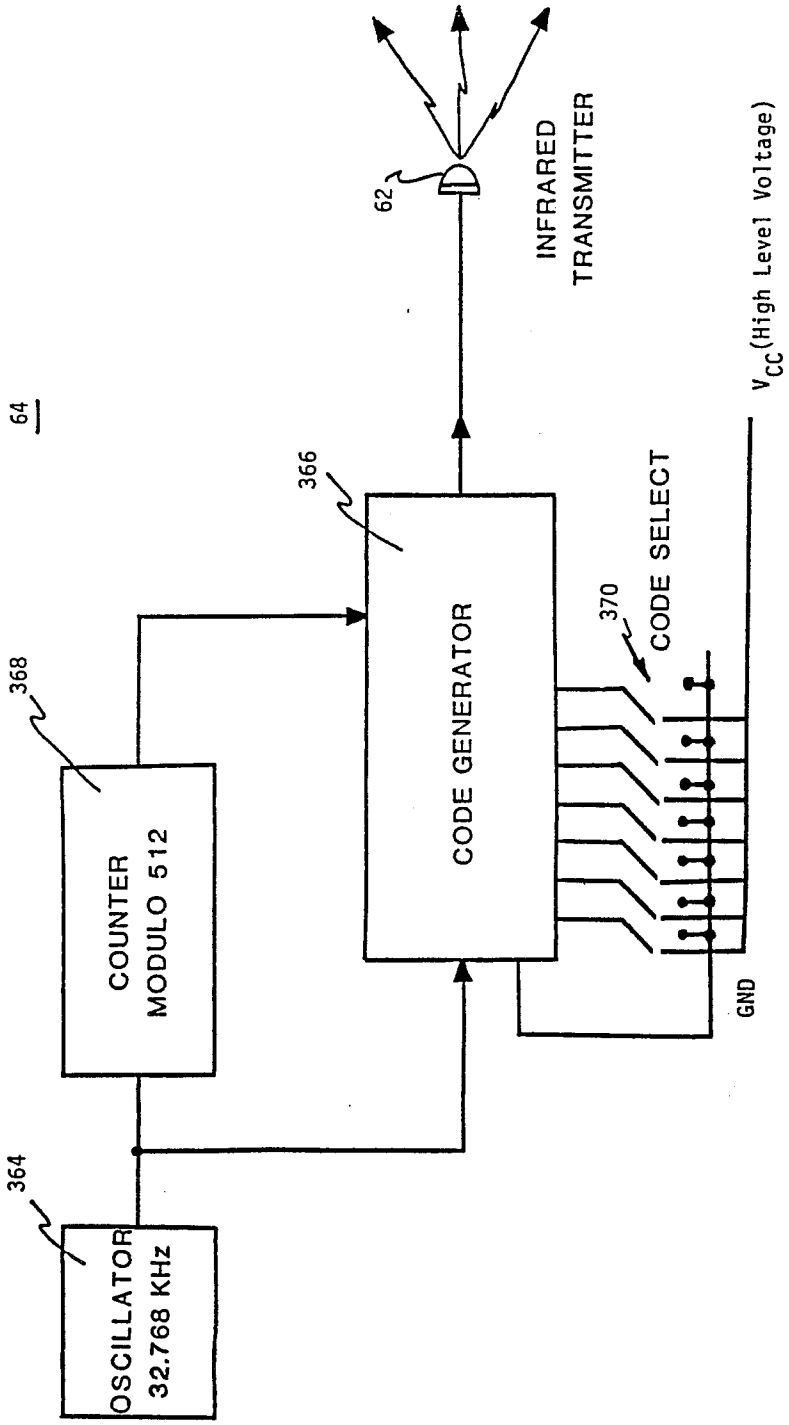
64
364
OSCILLATOR
32.768 KHz
368
COUNTER
MODULO 512
366
CODE GENERATOR
370
CODE SELECT
GND
V_{CC}(High Level Voltage)
62
INFRARED
TRANSMITTER

FIG. 15

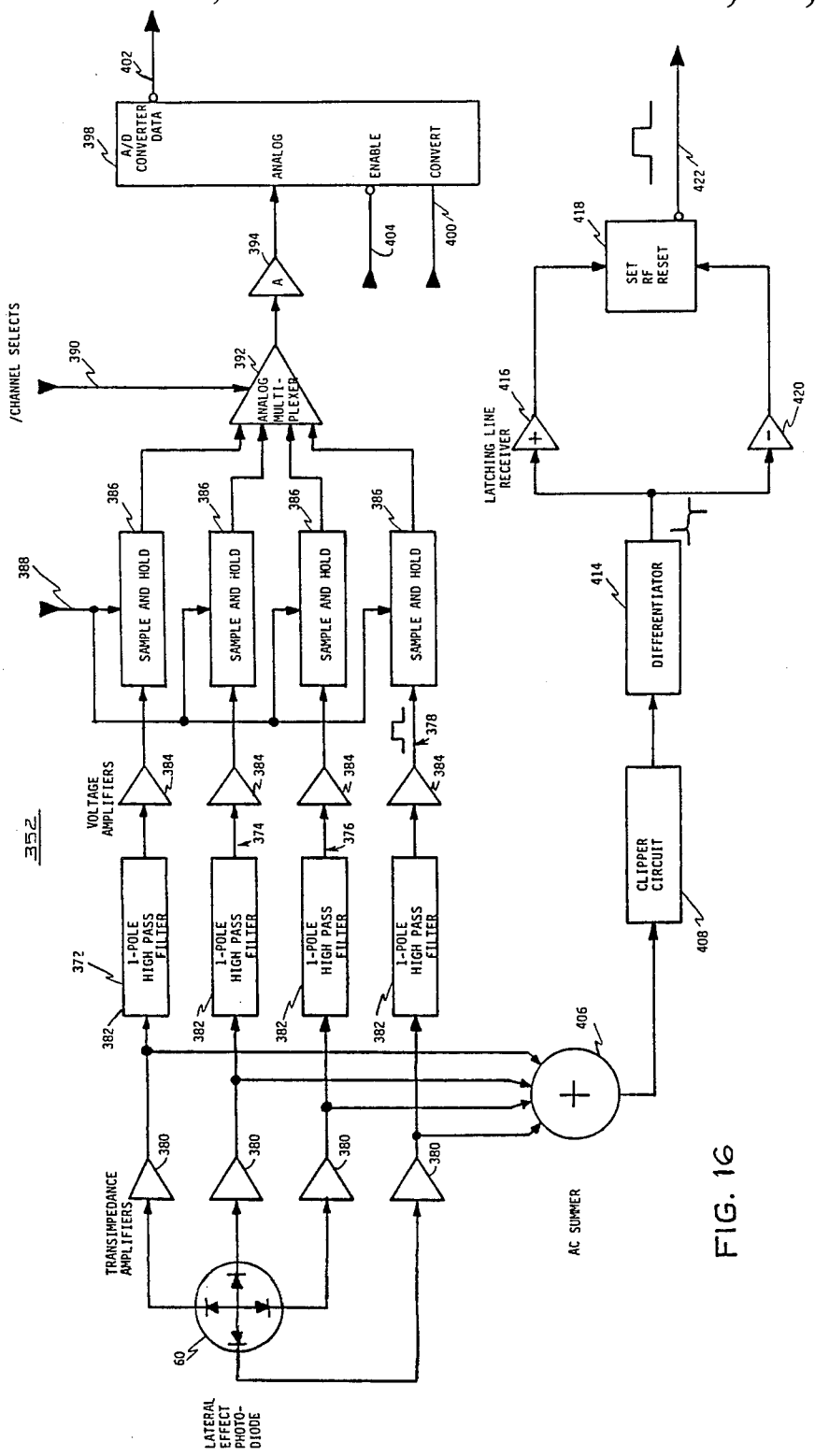
352
LATERAL EFFECT PHOTO-DIODE
60
TRANSIMPEDANCE AMPLIFIERS
380
382
1-POLE HIGH PASS FILTER
372
374
376
VOLTAGE AMPLIFIERS
384
378
SAMPLE AND HOLD
386
388
/CHANNEL SELECTS
390
ANALOG MULTI-PLEXER
392
A
394
A/D CONVERTER DATA
398
402
ANALOG
ENABLE
CONVERT
404
400
AC SUMMER
406
CLIPPER CIRCUIT
408
DIFFERENTIATOR
414
LATCHING LINE RECEIVER
416
SET RF RESET
418
420
422

FIG. 16

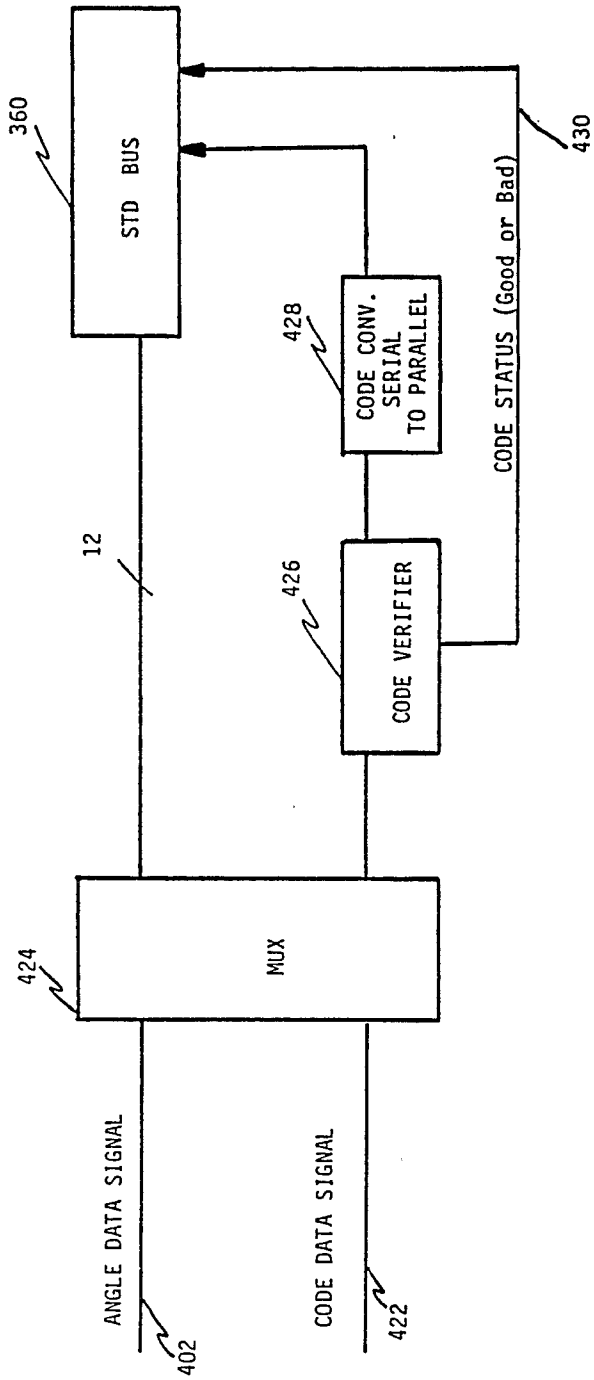
360
STD BUS
12
424
MUX
ANGLE DATA SIGNAL
402
CODE DATA SIGNAL
422
426
CODE VERIFIER
428
CODE CONV.
SERIAL
TO PARALLEL
CODE STATUS (Good or Bad)
430

FIG. 17

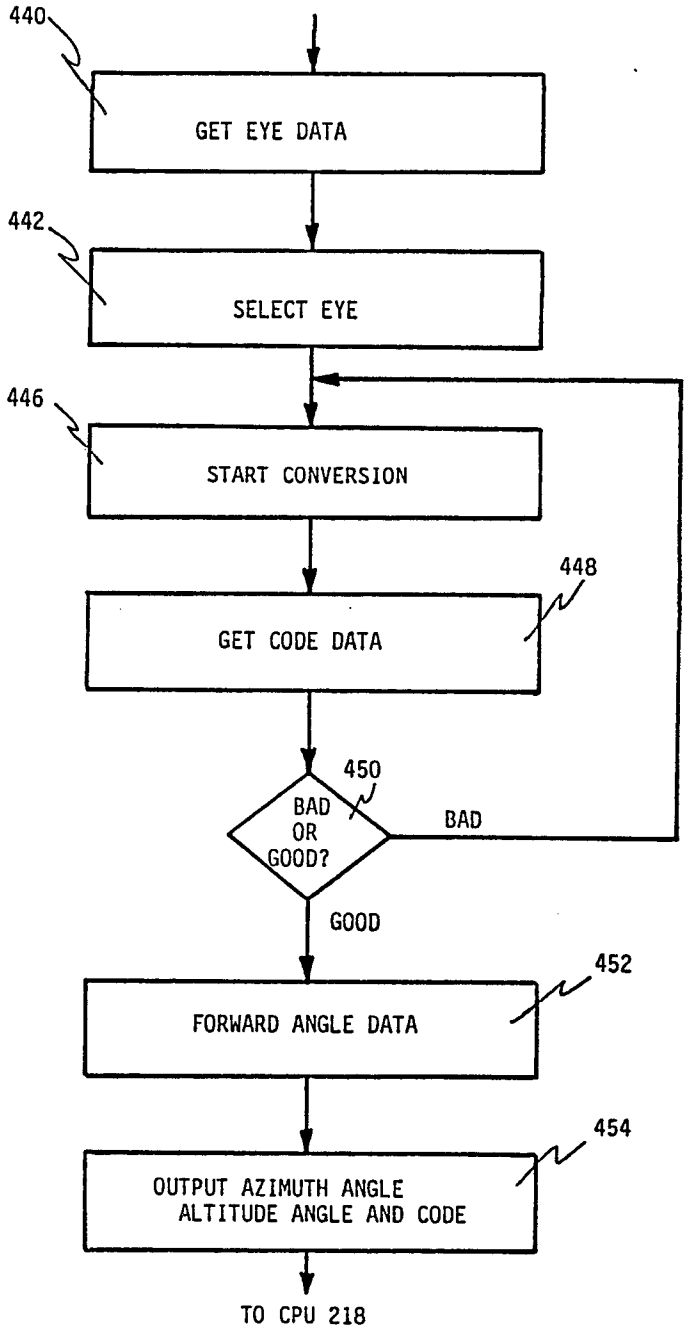
440
GET EYE DATA
442
SELECT EYE
446
START CONVERSION
448
GET CODE DATA
450
BAD OR GOOD?
BAD
GOOD
452
FORWARD ANGLE DATA
454
OUTPUT AZIMUTH ANGLE ALTITUDE ANGLE AND CODE
TO CPU 218

FIG. 18A

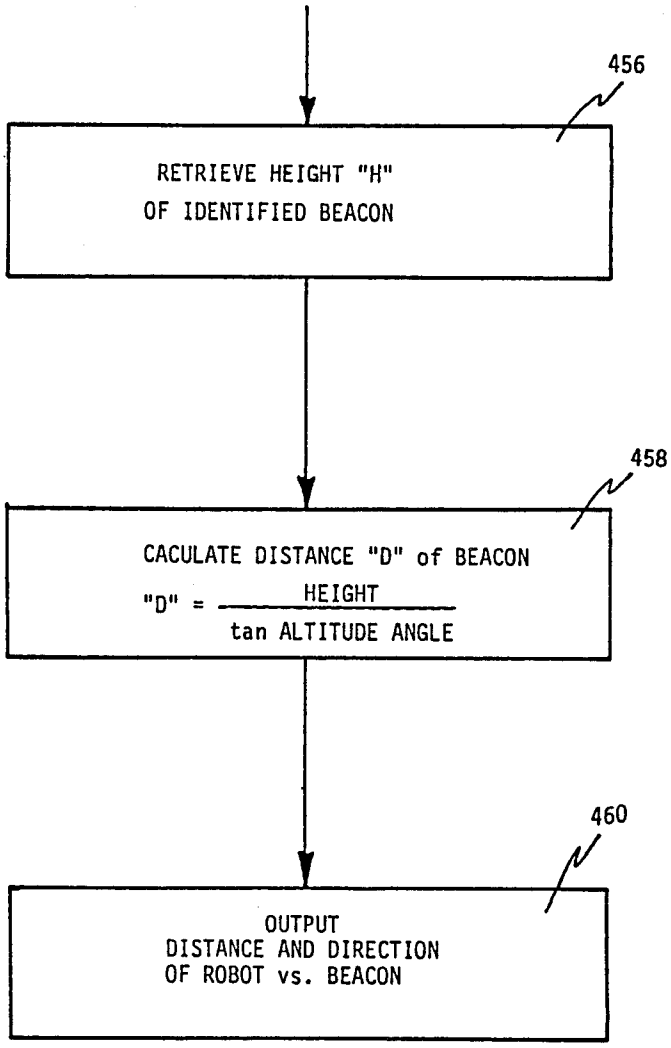
456
RETRIEVE HEIGHT "H"
OF IDENTIFIED BEACON
458
CACULATE DISTANCE "D" of BEACON
"D" = HEIGHT / tan ALTITUDE ANGLE
460
OUTPUT
DISTANCE AND DIRECTION
OF ROBOT vs. BEACON

FIG. 18B

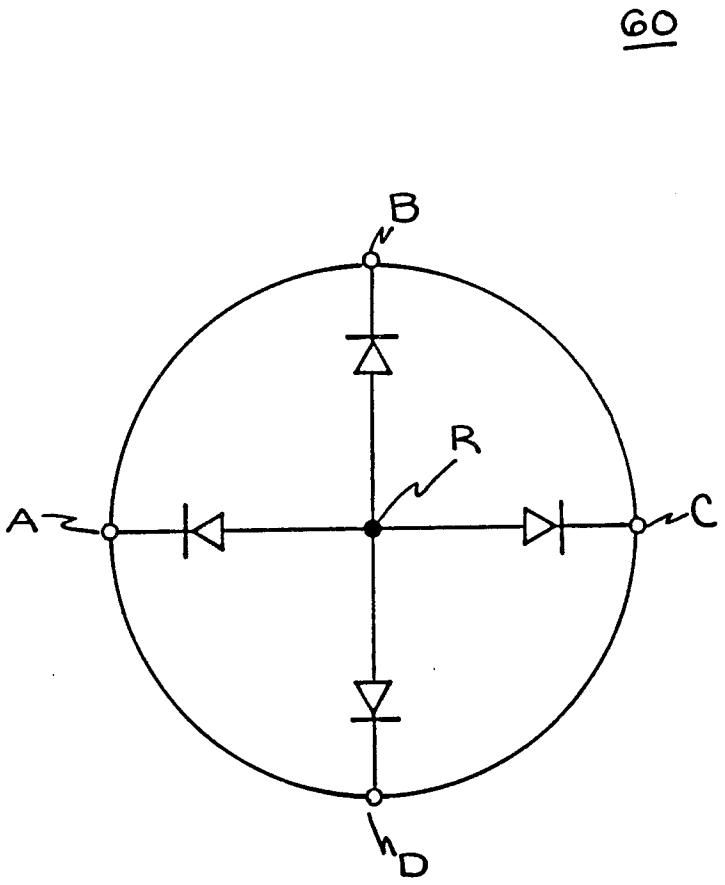

FIG. 19

BEACON PROXIMITY DETECTION SYSTEM FOR A VEHICLE

FIELD OF INVENTION

This invention relates to a system for detecting proximity of a vehicle to a navigation beacon, and more particularly to such a system for use in a mobile robot.

CROSS-REFERENCES

The following applications, filed concurrently herewith, are incorporated herein by reference:

Inventors	Title	Serial No.
Maddox et al.	Intrusion Detection System	864,032
Muller et al.	Ultrasonic Ranging System	864,002
Benayad-Cherif et al.	Position Locating System for Vehicle	864,031
Pavlak et al.	Power-Up Sequencing Apparatus	864,590
Kadonoff et al.	Orientation Adjustment System and Robot Using Same	864,450
Kadonoff et al.	Obstacle Avoidance System	864,585
Kadonoff et al.	Beacon Navigation System and Method for Guiding a Vehicle	864,442
George II et al.	Recharge Docking System for Mobile Robot	864,028

BACKGROUND OF INVENTION

Knowledge of the location of a vehicle relative to its environment is crucial, particularly for autonomous vehicles. Presently there are a number of distinct systems which utilize internal or external reference systems to estimate position.

Internal reference is typically provided by inertial reference utilizing a gyroscope. Accurate gyroscopes, particularly digitally readable ones, are quite expensive and are relatively delicate.

Internal reference can also be provided by dead reckoning. Encoders on the drive system record the distance travelled by the wheels or tracks of the vehicle. This technique, also known as odometry, further includes steering encoders to record changes in orientation.

Other systems model the surrounding environment by reducing the environment to geometric features. The vehicle matches the perceived geometric model with the expected model and correlates them to determine its offset in position. The environment is typically modelled as a series of line segments representing surface features, or as a grid representing the probability of presence or absence of objects within particular locations.

Yet other systems rely on a number of markers placed in the environment. A landmark system utilizes markers placed along a path to denote the distance travelled.

Some systems calibrate positions at predetermined locations, or nodes, where a number of markers are installed to permit triangulation. One system uses three infrared beacons to triangulate position. Triangulation can also be accomplished using other forms of energy such as radio waves.

Another system triangulates its position using a rotating laser. The laser beam reflects off corner reflectors at designated locations. The system determines the angles among the reflectors to triangulate its position.

SUMMARY OF INVENTION

It is therefore an object of this invention to provide an improved beacon proximity detection which determines the position of a vehicle along a path.

It is a further object of this invention to provide such a beacon proximity detection which calibrates position from a single reference point.

It is a further object of this invention to provide such a beacon proximity detection which eliminates the need for multiple reference points within view of the vehicle during position calibration.

Yet another object of this invention is to provide such a beacon proximity detection for use in a mobile robot.

The invention results from the realization that truly effective realignment of the position of a vehicle navigating along a path toward a navigation node can be achieved by a system which resolves the altitude angle between the vehicle and a beacon, determines the distance between the beacon and the vehicle, defines for the node the optimum distance between the vehicle and the beacon, and compares the determined distance with the optimum distance to establish any difference between them.

This invention features a proximity detection system for determining the distance between a vehicle and a navigation beacon. There are detector means, responsive to the beacon, for resolving the altitude angle between the beacon and the vehicle and means, responsive to the resolved altitude angle and to the height of the beacon, for determining the distance between the beacon and the vehicle. There is also means for defining an optimum distance between the beacon and the vehicle and for comparing the determined distance and the optimum distance between the beacon and the vehicle to establish any difference between them.

In one embodiment, the system further includes means for supplying to the means for defining the height of the beacon and an additional known geometric parameter for the optimum distance. The means for defining includes means for generating the difference in distance of the vehicle as a function of the resolved altitude angle, the known geometric parameter, and the known height. The known geometric parameter may be the expected altitude angle between the detector means and the beacon at the optimum distance and the means for defining calculates the difference in position according to the formula

$$\Delta X = (\theta_{VE} - \theta_{VA}) \frac{e}{\sin^2(\theta_{VA})}$$

where delta X is the difference in position, theta$_{VE}$ is the expected altitude angle, theta$_{VA}$ is the actual altitude angle, and e is the known height. Alternatively, the additional known parameter is the expected horizontal distance of the vehicle to the beacon.

In another embodiment, the detector means includes a multisector sensor for sensing a signal emitted by the beacon, and means responsive to the sensor sectors for generating an angle data signal representative of the angle from the sensor to the beacon in at least the altitudinal dimension. The sensor may be a lateral effect photodiode and the detector means further includes means responsive to the altitudinal angle for calculating the direction from the sensor to the beacon.

In yet another embodiment, the proximity detection system further includes means for adjusting the position of the vehicle by the established difference and the system further includes inclinometer means for sensing deviation of the vehicle from vertical. The means for defining includes means for combining the vertical deviation and the resolved altitude angle with each other and substituting the combined value for the resolved altitude angle to establish the difference in position.

This invention also features a proximity detection system for determining the distance between a mobile robot and a navigation beacon, including detector means for resolving the altitude angle between the beacon and the robot, means for determining the distance between the beacon and the robot, and means for defining an optimum distance between the beacon and the robot and for comparing the determined distance with the optimum distance between the beacon and the robot to establish any difference between them. The system may further include means for adjusting the position of the robot by the established difference and the robot may include a synchro-drive locomotion system.

This invention further features a proximity detection system for determining the distance between a vehicle and a navigation beacon including at least one beacon, detector means for resolving the altitude angle between the beacon and the vehicle, means for determining the distance of the beacon and the vehicle, and means for defining an optimum distance between the beacon and the vehicle and for comparing the determined distance and the optimum distance between the beacon and the vehicle to establish the difference between them.

In one embodiment, the beacon includes means for emitting detectable energy and the beacon may be a point source. The beacon includes means for producing the energy in a coded signal which uniquely identifies that beacon. The system may further include means for supplying the height of that uniquely identified beacon such as memory means in the vehicle for storing the known height for that beacon. The detector means includes a multisector sensor for sensing the signal emitted by the beacon, and means for generating a code data signal representative of the coded signal. The detector means also includes means, responsive to the sensor sectors, for generating an angle data signal representative of the angle from the sensor to the beacon in at least the altitudinal dimension. The beacon is positioned along the axis corresponding to the intended direction of travel of the vehicle.

DISCLOSURE OF PREFERRED EMBODIMENT

Other objects, features and advantages will occur from the following description of a preferred embodiment and the accompanying drawings, in which:

FIG. 1 is an axonometric view of a robot utilizing the orientation calibration system according to this invention;

FIG. 2 is a simplified exploded view with parts removed of the robot of FIG. 1;

FIG. 3 is a block diagram of the electronic modules included in the robot of FIGS. 1 and 2;

FIG. 4A is a schematic top plan view of the relationship between the head and the body to each other and relative to the environment;

FIG. 4B is a schematic top plan view of alignment between the head and the body using a position encoder;

FIG. 4C is a schematic top plan view of the sign of angles in relation to the front of the robot;

FIG. 5A is a schematic top plan view of the angles and distances between the robot, a predetermined node, and a beacon;

FIG. 5B is an elevational plan view of the robot and beacon of FIG. 5A relative to each other;

FIG. 5C is a schematic top plan view of the angles and distances between the robot, a selected path, and an offset beacon;

FIG. 6 is a schematic block diagram of the mobile module of FIG. 3;

FIG. 7A is a schematic diagram of a map of a number of nodes established in the environment;

FIG. 7B is a schematic diagram of a global navigation path to a goal node within the map of FIG. 7A;

FIG. 7C is a schematic diagram of local navigation between two nodes of the global path of FIG. 7B;

FIG. 8A is a schematic block diagram of position estimation utilizing beacon proximity detection according to this invention to perform X-axis calibration;

FIG. 8B is a flow chart of the arbiter of FIG. 8A;

FIG. 9 is a flow chart of the X-axis calibration of FIG. 8A;

FIGS. 10A and 10B are flow charts of end-path calibration of FIG. 8A;

FIGS. 11A and 11B are flow charts of body angle calibration of FIG. 8A;

FIG. 12 is a block diagram of position locating including beacon sensors and the beacon electronic module;

FIG. 13 is an illustration of the optical burst output of the beacons of FIG. 12;

FIG. 14 is an enlarged detail of a single burst of FIG. 13;

FIG. 15 is a more detailed block diagram of a beacon shown in FIG. 12;

FIG. 16 is a more detailed block diagram of an eye shown in FIG. 12;

FIG. 17 is a more detailed block diagram of the beacon STD-bus interface of FIG. 12;

FIGS. 18A and 18B are flow charts of the software utilized in the microprocessor of FIG. 12; and

FIG. 19 is a schematic of the photodiode of FIG. 16.

There is shown in FIG. 1 a vehicle, robot 10 according to this invention including a head section 12 and a base 14 movable on three wheels, only two of which, 16, 18, are visible. The wheels are mounted in three steerable trucks, only two of which, 20 and 22, are visible. There are twenty-four ultrasonic transducers 24 such as the electrostatic transducer of the Sell type available from Polaroid equally spaced at fifteen degrees around the periphery of base 14. One of transducers 24, such as transducer 24*a*, is designated as sensor zero; its azimuthal heading is utilized as described below. Above that on reduced neck 26 there are located six passive infrared motion detectors 28, 30, 32, 34, 36, 38, only two of which, 28 and 30, are shown. These detectors are equally spaced at sixty degrees apart and may be DR-321's available from Aritech. Just above that are two conductor bands 50 and 52 which are used to engage a charging arm for recharging the robot's batteries. Head section 12 is mounted to base 14 and rotates with respect to base 14 about a central vertical axis. Head section 12 carries an RF antenna 65 for sending and receiving communication signals to a base location or guard station. Head section 12 also includes an infrared sensor 60 for sensing radiation in the near infra-

red region, e.g. 880 nm, such as emitted from LED 62 of beacon 64, one or more of which are mounted on the walls in the space to be protected by robot 10 to assist in locating and directing robot 10 in the area in which it is to roam. An ultrasonic transducer 66 similar to one of the transducers 24 used for maneuvering and avoidance may be provided for ranging. There is also provided a passive infrared sensor 68 similar to sensors 28 and 30. A microwave transmission and reception antenna 70 and a TV camera 72 which may be turned on when an apparent intrusion has occurred; these are also included in head 12.

Base 14, FIG. 2, includes a main chassis 80 which carries three batteries 82 such as Globe 12 V 80 AH gel cells, only one of which is shown. When fully charged they will operate the robot for twelve hours or more.

Robot 10 is provided with a synchro-drive locomotion system 83. The wheels are steered simultaneously and driven simultaneously. By steering simultaneously, base 14 optimally maintains an azimuthal angle which is fixed in space and serves as the basic reference of the robot to the outside world. Trucks 20 and 22, with wheels 16 and 18 respectively, are suspended from chassis 80. Each truck as indicated at truck 20 includes a right-angle drive 84 which receives input from vertical drive shaft 86 and provides output on horizontal drive shaft 88 to operate pulley 90. Pulley 90 through belt 92 drives pulley 94 attached to the axle of wheel 16. Vertical drive shaft 86 and counterpart drive shafts 96 and 98 are driven by their respective sprockets or pulleys 100, 102, 104 which in turn are driven by endless belt 106 powered by the pulley 107 on output shaft 108 of drive motor 110 mounted beneath chassis 80. An encoder 111 mounted with motor 110 monitors the velocity of the robot. An idler wheel 112 is provided to maintain proper tension on belt 106.

Three additional shafts concentric with shafts 86, 96 and 98, respectively, are driven by a second set of pulleys or sprockets 120, 122, 124 engaged with drive belt 126 powered by sprocket 128 driven by steering motor 130 mounted beneath chassis 80. Idler pulley 131 is used to maintain tension on belt 126. An encoder 132 is associated with steering motor 130 to provide outputs indicative of the steering position. The steering motor shaft is connected through pulley 128 to extension shaft 134, the top of which is provided with a flange 136 with a plurality of mounting holes 138. Position sensor 135, such as a Hall Effect device, interacts with a magnetic detent on shaft 134 as described below. Electronic chassis 140 is mounted by means of screws 142 on three shorter standoffs 144. Three holes 146 in electronic chassis 140 accommodate the pass-through of longer standoffs 148, which mount neck 26 by means of screws 150. Electronic chassis 140 contains all of the electronic circuit boards and components such as indicated as items 152 that are contained in the base 14, including the status module described infra.

When an electronic chassis 140 and neck 26 are mounted on their respective standoffs, extension shaft 134 and flange 136 and the associated structure are accommodated by the central hole 160 in electronic chassis 140 and the opening in neck 26 so that the head plate 170 may be mounted by means of screws 172 to threaded holes 138 in flange 136. In this way the entire head rotates in synchronism with the trucks and wheels as they are steered by steering motor 130. Arrow 171 represents the frontal, forward-facing orientation of head 12.

In addition to the primary microwave sensor 70 there are three additional microwave sensors only one of which, 190, is visible spaced at ninety degrees about head plate 170 mounted in housings 192, 194, and 196. One or more additional ultrasonic sensors can also be mounted in head 12, e.g., ultrasonic sensor 195 on housing 192. Housing 194 faces directly to the back of the head as opposed to primary microwave sensor 70 which faces front. Housing 194 also contains a second infrared sensor, not visible, which is the same as infrared sensor 68.

Head 12 also contains internal reference sensors. Inclinometer 197, such as the ACCUSTAR Clinometer Sensor available from Sperry Corp., is mounted on the rear portion of external sensor housing 199. Its use in X axis calibration according to this invention is described below.

Cover 200 protects the electronics on head plate 170. All of the electrical interconnections between head 12 and base 14 are made through slip rings contained in slip ring unit 202 mounted about extension shaft 134 in base 14.

Head 12, FIG. 3, includes three electronic portions: beacon module 210, head ultrasonic module 212, and intrusion detection module 214. Beacon module 210 responds to the IR sensor 60 to determine what angle the beacon 64 is with respect to the robot. That angle is fed on bus 216 through the slip ring unit 202 to the main CPU 218. Beacon module 210 is also responsive to inclinometer 197.

Head ultrasonic module 212 responds to ultrasonic transducer 66 to provide ranging information on bus 216 to CPU 218. Intruder detection module 214 responds to the four microwave sensors such as sensors 70, 190, and the two IR sensors such as sensor 68, to provide indications as of yet unconfirmed intrusion events. These events are processed by the alarm confirmation unit 220 in CPU 218 to determine whether a true confirmed intrusion has occurred.

In the body section 14, there is included status module 222, mobile module 224, body ultrasonics module 226, and CPU 218. Status module 222 responds to the six infrared sensors 28–38 to provide an indication of an intrusion. Status module 222 may also monitor fire and smoke detectors, diagnostic sensors throughout the robot such as inclinometer 197, as well as chemical and odor detectors and other similar sensors. Mobile module 224 operates and monitors the action of drive motor 110 and steering motor 130. The twenty-four ultrasonic transducers 24 provide an input to the body ultrasonic module 226, which provides digital range information for the robot. Finally, body 14 contains CPU 218, which in addition to the alarm confirmation unit 220 also interconnects with a floppy disk controller, a two-channel serial I/O board, and a reset board which receives inputs from a pushbutton reset and CPU 218 and provides as outputs ultrasonic resets, motor resets, status resets, beacon resets, I/O module resets and head ultra resets. CPU 218 also receives inputs from RF antenna 65 through RF circuit 240.

Several notations describe the orientation of head 12 to body 14, as shown in FIG. 4A. Arrow 300 represents its front, which faces the direction of travel, shown as front arrow 171 in FIG. 2. The azimuthal orientation of body 14, FIG. 4A, is represented by point 302, hereinafter referred to as sensor zero. Sensor zero is a designated, fixed point on body 14 itself, e.g. sensor 24*a*, FIG. 2. The angle between head front 300 and body

zero is $theta_D$. The azimuthal angular distance from global zero to sensor zero is represented by $theta_B$; arrows **304** represent the designated orientation for the surrounding environment.

Head **12** is realigned with base **14** using position sensor **135** and magnetic detent **306** on shaft **134** as shown in FIG. **4B**. This is accomplished at designated homing nodes by rotating head **12**, that is, by pivoting the three steerable trucks, about its vertical axis such that magnetic detent **306** is brought into alignment with position sensor **135** of base **14**. The head direction angle $theta_D$ is then set to zero; this and other operational parameters of the robot are maintained in updatable memory, hereinafter referred to as the blackboard, in CPU **218**, FIG. **3**.

The sign of angles is determined as shown in FIG. **4C**. Object **290** is directly aligned with robot front **300**. Angles in the clockwise direction, indicated by arrow **291** between object **290** and object **292**, are positive in value. Angles in the counterclockwise direction, shown by arrow **293** toward object **294**, are negative.

The position and orientation of robot **10** relative to beacon **64a** is shown in FIG. **5A**. $Theta_{HA}$ is the actual horizontal angle, that is, the azimuthal angle, between head front **300** and beacon **64a**. Beacon **64a** has a 30° transmitter beam width, indicated by arrow **303**, which is detected by sensor **60**, FIGS. **1** and **2**, within its 22° field of view. The expected horizontal angle, $theta_{HE}$, is zero when robot **10** is properly following path **308** towrd wall **301**. Horizontal deviation from path **308** is designated by the variabley, here shown by arrow **310**. The orientation of path **308** is represented by angle $theta_P$, which is 180° in relation to coordinate arrows **304**.

Dashed line **312** parallels path **308**. The angular deviation from the direction of path **308** to front **300** is represented by head-path angle $theta_M$. Sensor zero path angle $theta_{SZ}$ is the angle from the path to sensor zero **302**. Head direction angle $theta_D$ is equal to the sensor zero path angle $theta_{SZ}$ subtracted from head-path angle $theta_M$. Angle $theta_{SZ}$ is equal to path angle $theta_P$ minus body angle $theta_B$.

Thus, body angle $theta_B$ serves as the basic reference for robot **10** to the outside world. The actual direction of an intruder, a fire or a path is determined for the robot in relation to sensor zero whose heading is updated by body angle $theta_B$.

Body angle calibration, that is, the updating of the angular orientation between sensor zero and global zero, can be conducted at any place along path **308**. Calibration of the distance travelled in the X direction, shown by arrow **314**, must be conducted at a predetermined location such as node **316**. As shown in FIG. **5B**, the vertical angle, that is, the altitude angle, between beacon sensor **60** and LED **62a** of beacon **64a** is classified as actual vertical angle $theta_{VA}$. This is obtained while robot **10** is distance f_A from wall **301**. The expected vertical angle $theta_{VE}$ learned by initially placing robot **10** at node **316** to measure the angle. Inclinometer **197**, FIG. **2**, is utilized to correct for unevenness in terrain.

As described below, the expected distance f_E is measured from node **316** to wall **301** and can be used instead of expected vertical angle $theta_{VE}$. In either case, the vertical distance between the height of beacon sensor **60** and LED **62a** must be measured, represented by vertical distance e and shown by arrow **318**. When the distance between wall **301** and vertical axis VA is desired, the robot's radius r is added to the trigonometric calculations.

The actual distance between robot **10** and wall **301** can also be measured by head ultrasonic sensor **66** within its 15° field of view. This distance measurement is denoted as horizontal distance R_{HA} and is shown by dashed arrow **320**.

Geometric parameters describing the location of robot **10** along the path and its orientation relative to an offset beacon are shown in FIG. **5C**. The path distance X_p is represented by line **321** between start node **320** and end node **322**. Line **324** represents the distance travelled, X_M, and line **326** designates the remaining distance to travel, $X_p - X_m$.

If the reference to be observed by robot **10** such as beacon **64b**, is not directly aligned with path **308a**, the angle between beacon **64b** and path **308a** is denoted by offset angle $theta_{off}$. Head horizontal angle $theta_{HA}$ represents the difference in orientation between head front **300** and beacon **64b**.

An estimate of distance travelled and of location is maintained by dead reckoning accomplished by X-Y positioner **322** of mobile module **224**, FIG. **6**. Mobile module **224** includes motor controller **330**, which controls drive motor **110** and steering motor **130**. Distance travelled is determined by encoder **111** which provides this information to X-Y positioner **332**. Similarly, steering encoder **132** provides change in orientation information to positioner **332**, which accordingly outputs path distance X_M, path deviation Y_M, and head orientation $theta_M$, which denotes the angle of the head to the path. Encoders **111**, **132** also provide feedback to motor controller **330**.

Navigation of the robot through its environment is described in relation to successive nodes. Map **338**, FIG. **7A**, includes selected nodes **340** which have a known distance and angle among each other. The robot travels toward successive goal nodes. For example, if the robot is at node **4**, the starting node, the robot can be directed to visit goal node **7**. The paths required to accomplish this are designated in FIG. **7B** as the global path **342**. Global path **342** designates consecutive navigation nodes, and a list of paths between these nodes. At each node, the robot must change headings, recalibrate estimated position, and head towards the next node.

Travel along the particular path is represented by path **344**, FIG. **7C**. Local navigation along path **344** moves the robot from node **4** to node **5**.

The spatial models represented by FIGS. **7A–7C** simply represent navigable paths through the environment and do not actually describe the surrounding environment. This system requires much less information than other systems utilizing more complicated techniques such as geometric modeling of the environment.

In addition to the identification of the starting node and the list of successive nodes to visit, the predetermined map information also includes a number of characteristics for each path. These include the distance of the path and its angle, $theta_P$, in relation to global zero. The path information may also include the width of the path, and, if a beacon is disposed at the end of the path, the beacon code, distance f, height e, and expected vertical angle $theta_{VE}$. The intensity of the beacon can be monitored to confirm proper operation of the beacon if it is an active beacon; expected intensity of passive beacons such as reflectors or bar codes are not required. One or more position calibration techniques can be specified, such as beacon proximity detection according

to this invention to perform X-axis calibration, ultrasonic end-path calibration, and body-angle calibration.

Robot **10** uses one or more position calibration systems **399** to estimate its position as shown in FIG. **8A**. The position calibration systems **399** are located within CPU **218** and draw upon several modules. X-axis calibration system **400** according to this invention obtains the vertical deviation phi_i from inclinometer **197**, information from map **402**, and actual vertical angle $theta_{VA}$ from beacon module **210**.

End-path calibration system **404** provides an alternate technique of determining the difference in travel along the X-axis and determining adjustments to body angle $theta_B$. End-path calibration system **404** draws upon map **402** and ultrasonic range data from module **212**.

Body-angle calibration system **406** corrects for accumulated error in orientation due to such factors as drift and precession of base **14**. System **406** is responsive to map **402**, beacon data including $theta_{HA}$ from beacon module **210** and data from mobile module **224** representing present estimated position and head orientation.

After obtaining one or more calibrations from calibration systems **400**, **404** and **406**, arbiter **408** updates blackboard **410** which maintains current status information for robot **10** including its actual position Initializer **411** supplies initial values to blackboard **410**, such as zeros generated for body angle $theta_B$. Arbiter **408** provides corrected Y_M and $theta_M$ values to X-Y positioner **332**, FIG. **6** while the robot is moving and while stationary provides X_M, Y_M and $theta_M$ corrections to motor controller **330** which are implemented as directed.

Arbiter **408** uses end-path calibration from system **404** when nearing the end of the path and at the end of the path. Body-angle calibration from system **406** is examined along the path. X-axis calibration from system **400** is obtained only at selected nodes.

The operation of arbiter **408** is shown in FIG. **8B**. Calibration systems continually output calibration values or "NO VALUE" but are sampled to obtain their estimations of position only if enabled from map **402** for the particular path or node the robot presently occupies Calibration of body angle, X-axis, and end-path position are successively accessed, steps **412**, **414** and **416**, respectively. Further, the arbiter decides whether to relinquish control of the robot when a calibration system requests motor control.

If map **402** contains the appropriate enable for body angle calibration, step **412**, the arbiter observes, step **418**, whether calibration system **406** has requested control by setting its control flag. If it has, control is provided, step **420**, unless an external override command (not shown) is present. The arbiter waits for body angle calibration to be completed, step **422**, and then examines whether the output calibration data is other than "NO VALUE". Valid data is entered into blackboard **410** via step **426**, while the operation proceeds directly to step **414** if the data are NO VALUE.

When the control flag is not set, step **418**, examination of the output data is immediately made, step **424**. Similarly, the outputs of X-axis calibration and end-path calibration are obtained, as represented by loops **430** and **432**, respectively. During these calibrations, steps **434** and **436**, control remains with the respective calibration systems until the difference between the actual and expected position of the robot along the path becomes zero.

The operation of X-axis calibration system **400** is shown in FIG. **9**. If the robot is stopped, step **440**, a distance correction of delta X equal to NO VALUE is provided, step **442**. When the robot is in a fixed position the X-axis calibration flag is raised, step **444**, and the calibration system waits until control is received, step **448**. The beacon is located, step **446**, and inclinometer **197** is read until motion of the robot settles, step **450**. Once stable, the final inclination reading, phi_i is taken, as is the stable reading of vertical angle $theta_{VA}$, step **452**. Actual vertical angle $theta_{VA}$ is corrected by inclination phi_i which has a positive or negative value depending whether robot **10** is inclined toward or away from the beacon, respectively, step **454**.

The difference between the expected X distance and the actual X distance is obtained in step **456** as represented by the trigonometric formula

$$\Delta X = (\theta_{VE} - \theta_{VA}) \frac{e}{\sin^2(\theta_{VA})} \quad (1)$$

where delta X is the difference in position along the X-axis, $theta_{VE}$ is the expected vertical angle, $theta_{VA}$ the actual vertical angle, and e is the vertical elevation of the beacon as described in FIG. **5B**. The value of delta X is provided to motor controller **330** through arbiter **408**, step **458**. The robot moves along distance X_M by an amount equal to delta X, step **459**. The operation cycles to step **440** and the robot is readjusted until a delta X of zero is resolved in step **456**.

Other methods of calculating delta X can be used, for example, where the expected horizontal distance between the robot and the beacon is substituted for expected vertical angle $theta_{VE}$. The latter parameter is preferred because it can be obtained empirically in operations such as map making by locating the robot at the node or other predetermined location and instructing it to observe the beacon to learn the vertical angle. This obviates the need for physically measuring the horizontal distance between the robot and the beacon.

The operation of the end-path calibration system commences with reading of the head ultrasonic range R_{HA}, step **460**, FIG. **10A**. If the actual range is greater than the expected range, supplied by map **402**, an output of "delta X equals no value" is generated, steps **462**, **463**, respectively.

Otherwise, if the observed range is less than or equal to the expected range, the end-path calibration flag is raised, step **464**, and the calibration system waits until control is received, step **466**. Once control is obtained, the calibration system commands that the drive motor halt, step **468**, and commands head ultrasonic **66** of head **12**, FIGS. **1** and **2**, to take nultrasonic readings along a selected arc, such as fifteen readings along a 30° arc, each reading two degrees apart from the others, step **470**. The minimum distance is found in step **472**.

A direction perpendicular to the wall is computed, step **474**, e.g., by using the angle which gave the minimum distance in step **472**. The robot is commanded to turn to this perpendicular direction, step **476**, FIG. **10B**, after which delta theta B is set to $theta_{turn}$, step **476**. Now that the robot is facing directly toward the object, a final reading of the head ultrasonics are taken to obtain distance R_{HA}, step **478**. The deviation in distance traveled along the X-axis is determined by the formula

$$\Delta X = R_{HE} - B_{HA} \quad (2)$$

and delta X and delta $theta_B$ are output to motor controller **330** through arbiter **408**, steps **480**, **482**, respectively. The position X_M of the robot is adjusted by delta X, step **483**. The end-path calibration system cycles to step **460** to resume monitoring.

The body angle calibration system corrects for accumulated error in orientation which is due to the drift or precession of base **14**. Path deviation distance Y_M occurs during obstacle avoidance, for example, and changes in head orientation represented by $theta_M$ can be attributed to rotation of head **12** while tracking a beacon to correct for precession of the body. Body angle calibration system **406** corrects and calibrates for each of these variables.

In operation, the beacon horizontal angle $theta_{HA}$ is read, step **484**, FIG. **11A**. Optionally, such as shown in phantom by step **486**, the operation first determines whether the robot is stopped at a node and, if it is, raises body angle calibration flag, step **488**, FIG. **11B**. Once control is received, step **490**, the system determines whether the node is a homing node, step **492**. If it is, the robot turns to face sensor zero, step **494** and direction angle $theta_D$ is set to zero. Otherwise, operation proceeds directly to step **496** where path direction $theta_P$ is obtained from the map **402**. The turn angle $theta_{turn}$ is set to the distance direction $theta_D$ subtracted from path orientation $theta_P$, step **498**.

Once turn angle $theta_{turn}$ is obtained, that value is output to motor controller **330**, FIG. **6**, step **500**. The robot turns to face the expected beacon and hunts for the beacon, steps **502**, **504**, respectively. The final head orientation $theta_M$ is recorded, operation proceeds to step **484**, FIG. **11A**, and beacon horizontal angle $theta_{HA}$ is read. At this stage, the expected deviation distance Y_M and the head direction $theta_M$ are read from the mobile module, step **504**. If the beacon is in view and the robot is on course, meaning that the absolute values of horizontal orientation $theta_{HA}$ is less than 10° and deviation distance Y is less than one foot, calibration of body angle is obtained by determining the increment delta $theta_B$ as equal to the sum of $theta_M$ and $theta_{HA}$, step **510**. If either of steps **506** and step **508** are not satisfied, meaning that the robot has significantly deviated from the path, no value is output, step **512**, and other calibration systems such as end-path calibration are tried.

Once the increment delta $theta_B$ is determined, Y is reset by setting delta Y to negative Y, step **514**, and delta $theta_B$ and Y are provided to the arbiter, step **516**. Optionally, head angle $theta_M$ is reset by setting it equal to minus horizontal angle $theta_{HA}$, step **515**, shown in phantom. Operation then returns to steps **486**, **484** as described above.

In its simplest construction, body angle calibration involves reading the beacon horizontal angle $theta_{HA}$, turning to face the beacon, setting delta $theta_B$ to $theta_{HA}$, and outputting delta $theta_B$. In blackboard **410**, delta $theta_B$ is initially set to zero and then incremented as needed by either the body angle calibration or end-path calibration systems.

Position locating system **1350**, FIG. **12**, includes one or more beacon transmitters **64**, **64*a***, **64*b***, each having an infrared source **62**, **62*a***, **62*b***. Also included is an infrared sensor **60** sensitive to the infrared radiation emitted by source **62**, and associated with sensor **60** is an eye circuit **1352** whose output is provided on bus **1354**. Bus **1354** interconnects with beacon STD-bus interface **1356** in beacon module **210**. Interface **1356** communicates with microprocessor **1358** over STD bus **1360**. Microprocessor **1358** may be a Z80 and it communicates directly with CPU **218**, which may be a 68000.

Beacon transmitter **64** provides an optical burst **1362** of coded signals every 15.6 milliseconds, FIG. **13**. Each burst, as shown in greater detail in FIG. **14**, has a total burst time of 244 microseconds which defines an eight-bit word, each bit being 30.5 microseconds wide. The first bit is a start bit; the next seven bits are code bits and represent 128 different possible codes. Each code can uniquely identify a single beacon, so that with this simple arrangement one hundred twenty-eight different beacons can be uniquely identified; that is, when the infrared source is seen that is considered a logic one. When the infrared source, which may be a light-emitting diode or LED, is off, then the signal is low and is considered a logic zero. The signals shown in FIGS. **13** and **14** are generated in beacon transmitter **64** by an oscillator **1364**, FIG. **15**, which runs continuously at 32.768 KHz. Its output is delivered directly to a register in code generator **1366**. Its output is also delivered to a counter **1368**, modulo **512**, which divides the 32.768 KHz signal to provide the time period shown in FIGS. **13** and **14**. That is, with every 64th pulse (or every 5.6 ms) a burst occurs of eight bits. Eight bits are set to one or zero to produce the unique code for a particular beacon by the setting of the code select keys **1370**. When one of the keys **1370** is toggled to ground, the associated stage of the register in **1366** is grounded, thereby placing a logic one in that bit position. Switches that are left toggled to high voltage produce a logic zero in the associated stage. The patterns of ones and zeros modulate the infrared radiation produced by LED **62** so that a coded signal is provided which uniquely defines the particular beacon.

Sensor **60** in eye circuit **1352**, FIG. **16**, is a multisector sensor such as a dual-axis lateral effect photodiode. It provides four separate outputs, each indicative of the infrared radiation incident on its particular sector. By analyzing the relative values of the radiation falling on the different sectors, a determination can be made as to the angle of the sensor to the emitting beacon. Each of the four sector outputs from photodiode **60** is fed to a different channel **1372**, **1374**, **1376**, **1378**. Each channel includes an amplifier **1380**, high-pass filters **1382**, voltage amplifiers **1384**, and sample and hold circuits **1386**. High-pass filters **1382** pass the coded signal from beacon **64** but block 60-cycle and 120-cycle signals introduced by ambient light conditions; periodically on command from microprocessor **1358** a signal on sample and hold line **1388** causes sample and hold circuits **1386** to sample and hold the signal in each channel. Those signals are then multiplexed by analog multiplexer **1392** as directed by a command from microprocessor **1358** on line **1390**. The signal from each channel is fed directly to the gain control of amplifier **1394**. Finally, the output from each channel is fed to A/D converter **1398**, where it stops unless a control signal on line **1400** from microprocessor **1358** requests the angle data signal on line **1402**. Microprocessor **1358** also provides a select and enable signal on line **1404** to A/D converter **1398** to indicate the particular eye circuit **1352**, **1352*a***, **1352*b*** or **1352*c*** which is currently being interrogated.

Simultaneously with this, one or more of the outputs from photodiode **60** after passing through amplifiers **1380** are combined in an AC summer **1406** in order to maximize the signal which will be used to detect the identifying code. From summer circuit **1406** the signal is

passed to clipper circuit **1408** which limits the output independent of the input amplitudes. At this point the signal is constituted by one or more coded pulses riding on an envelope of sixty or one hundred twenty cycle noise. Differentiator circuit **1414** is therefore used to detect only the transitions of the pulses; thus, for every positive-going transition a positive spike appears at the output of differentiator **1414** and for every negative-going transition a negative spike occurs at the output of differentiator **1414**. The positive-going spikes pass through amplifier **1416** and set flip-flop **1418** to define the beginning of a pulse. Negative-going spikes passing through amplifier **1420** reset flip-flop **1418** and define the end of the pulse. In this way the pulses and the received coded signal are reconstituted one at a time to construct the code data signal on line **1422**. The output of flip-flop **1418** may again be switched to indicate which one of the eye circuits **1352**, **1352***a*, **1352***b* or **1352***c* is currently being monitored.

The angle data signal on line **1402**, FIG. **17**, is fed directly through MUX **1424** in beacon STD-bus interface **1356** to STD-bus **1360**. The code data signal is fed from MUX **1424** to code verifier circuit **1426**. After it is verified it is submitted to a converter **1428** where it is changed from a serial signal to a parallel signal and then provided to STD-bus **1360**. Code verifier circuit **1426** may utilize any of a number of techniques for verifying the authenticity of an incoming code. For example, the incoming signal may be sampled at fixed times following a start pulse when pulse transitions would normally be expected in a valid signal. If the transitions occur within narrow windows at the expected times, they are treated as valid code; otherwise they are rejected. The code status is provided on line **1430** to STD-bus **1360**.

Under software control, operation may begin with a signal from CPU **218** in step **1440**, FIGS. **18A** and **18B**, with the command "Get Eye Data". When microprocessor **1358** receives that signal it selects a particular eye in step **1442**. The A/D converter is then commanded to start the conversion in step **1446** and the code data is obtained on line **1422** in step **1448**. In step **1450**, if the code data is bad the cycle starts again with the beginning of a new conversion in step **1446**. If the code is good then the angle information is used and the next step **1452** provides the azimuth angle and the altitude angle and the code in step **1454** to microprocessor **1358**. Here the angle data is converted to the azimuth angle and the altitude angle and combined with the code and directed to CPU **218**. The azimuth angle needs no further processing. The altitude angle and code are delivered to CPU **218**, which then retrieves the height H of the identified beacon in step **1456**; height H can be unique for that beacon, or all beacons can be placed at the same height. That height is used to calculate the distance D to the beacon by dividing the height by the tangent of the altitude angle in step **1458**. Then the distance and direction of the robot versus the beacon is output in step **1460**.

The calculation in step **1454**, FIG. **18A**, of the azimuth angle and the altitude angle from the angle data signal is accomplished by determining the X position and the Y position from the dual axis lateral effect photodiode of FIG. **16** shown in more detail in FIG. **19**. The X position is calculated according to the expression:

$$X\text{ position} = \frac{A - C}{A + C} \tag{3}$$

and the Y position by the expression:

$$Y\text{ position} = \frac{B - D}{B + D} \tag{4}$$

The division by A+C and B+D respectively normalizes the signal to reduce its dependence on the incident light level. The angles are those determined by the expression:

$$\text{Altitude Angle} = \arctan\left(\frac{B - D}{B + D} \times k\right) \tag{5}$$

$$\text{Azimuthal Angle} = \arctan\left(\frac{A - C}{A + C} \times k\right) \tag{6}$$

where K is a constant dependent on the size of the detector and focal length of the light gathering lens if one is used:

$$K = \frac{\frac{1}{2}D}{F_1} \tag{7}$$

where D is the diameter of the detector and F_1 is the focal length of the lens.

Although specific features of the invention are shown in some drawings and not others, this is for convenience only as each feature may be combined with any or all of the other features in accordance with the invention.

Other embodiments will occur to those skilled in the art and are within the following claims:

What is claimed is:

1. A proximity detection system for determining the distance between a vehicle and a navigation beacon comprising:

detector means, responsive to the beacon, for resolving the altitude angle between the beacon and the vehicle;

means, responsive to said resolved altitude angle and to the height of the beacon, for determining the distance between the beacon and the vehicle; and

means for defining an optimum distance between the beacon and the vehicle and for comparing said determined distance and said optimum distance to establish any difference between them.

2. The proximity detection system of claim **1** further including means for supplying to said means for defining the height of the beacon and an additional known geometric parameter for said optimum distance.

3. The proximity detection system of claim **2** in which said means for defining includes means for generating the difference in distance of the vehicle as a function of said resolved altitude angle, said known geometric parameter and said known height.

4. The proximity detection system of claim **3** in which said additional known geometric parameter is the expected altitude angle between said detector means and the beacon at said optimum distance.

5. The proximity detection system of claim **4** in which said means for defining calculates the difference in position according to the formula:

$$\Delta X = (\theta_{VE} - \theta_{VA}) \frac{e}{\sin^2 (\theta_{VA})}$$

where delta x is the difference in position, θ_{VE} is the expected vertical angle, θ_{VA} is the actual vertical angle, and e is the known height of the beacon.

6. The proximity detection system of claim **3** in which said additional known geometric parameter is the expected horizontal distance of said vehicle to the beacon.

7. The proximity detection system of claim **2** in which said means for supplying includes memory means for storing said known height and said known geometric parameter.

8. The proximity detection system of claim **1** in which said detector means includes:

a multisector sensor for sensing a signal emitted by the beacon; and

means responsive to said sensor sectors for generating an angle data signal representative of the angle from said sensor to the beacon in at least the altitudinal dimension.

9. The proximity detection system of claim **8** in which said sensor is a lateral effect photodiode.

10. The proximity detection system of claim **8** in which said detector means further includes means, responsive to said altitudinal angle, for calculating the direction from the sensor to the beacon.

11. The proximity detection system of claim **1** further including means for adjusting the position of the vehicle by the established difference.

12. The proximity detection system of claim **1** further including inclinometer means for sensing deviation of said vehicle from vertical.

13. The proximity detection system of claim **12** in which said means for defining includes means for combining said vertical deviation and said resolved altitude angle with each other and substituting the combined value for said resolved altitude angle to establish the difference in position.

14. A proximity detection system for determining the distance between a mobile robot and a navigation beacon, comprising:

a mobile robot;

detector means, responsive to the beacon, for resolving the altitude angle between the beacon and said robot;

means, responsive to said resolved altitude angle and to the height of the beacon, for determining the distance between the beacon and said robot;

means for defining an optimum distance between the beacon and said robot and for comparing said determined distance and said optimum distance to establish any difference between them.

15. The proximity detection system of claim **14** further including means for adjusting the position of said robot by said established difference.

16. The proximity detection system of claim **14** in which said robot includes a synchro-drive locomotion system.

17. A proximity detection system for determining the distance between a vehicle and a navigation beacon, comprising:

at least one beacon;

detector means, responsive to said beacon, for resolving the altitude angle between said beacon and the vehicle;

means, responsive to said resolved altitude angle and to the height of said beacon, for determining the distance between said beacon and the vehicle; and

means for defining an optimum distance between said beacon and the vehicle and for comparing said determined distance and said optimum distance to establish any difference between them.

18. The system of claim **17** in which said beacon includes means for emitting detectable energy.

19. The system of claim **18** in which said beacon is a point source.

20. The system of claim **18** in which said beacon includes means for producing said energy in a coded signal which uniquely identifies that beacon.

21. The system of claim **20** further including means for supplying the height of that uniquely identified beacon.

22. The system of claim **21** in which said means for supplying includes memory means, disposed in said vehicle, for storing the known height for that beacon.

23. The system of claim **20** in which said detector means includes:

a multisector sensor for sensing the signal emitted by said beacon;

means, responsive to said sensor, for generating a code data signal representative of said coded signal; and

means, responsive to said sensor sectors, for generating an angle data signal representative of the angle from said sensor to said beacon in at least the azimuthal dimension.

24. The system of claim **17** in which said beacon is positioned along the axis corresponding to the intended direction of travel of said vehicle.

* * * * *